STATE OF ALASKA

DEPARTMENT OF NATURAL RESOURCES

DIVISION OF PARKS
AND
OUTDOOR RECREATION

DENALI STATE PARK BYERS LAKE OUTLET BRIDGE REPLACEMENT PROJECT

NO. CED2022.03

Vicinity Map

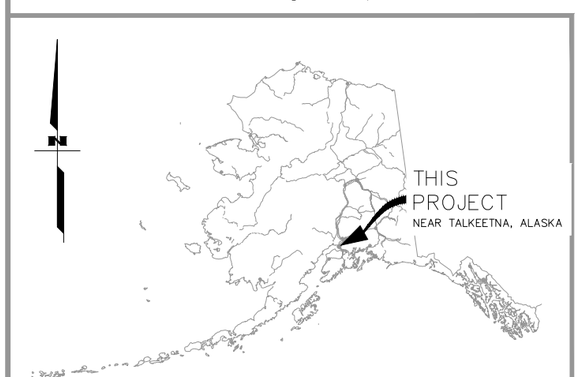

The following Division of Parks & Outdoor Rec. standard drawings apply to this project: NONE
The following D.O.T.(Highways) standard plans apply to this project: NONE

Designed by:
AK_JAKE
2900 Spirit Dr. Suite 209, Anchorage, AK 99508

Plans developed for:
STATE OF ALASKA
Department of Natural Resources
Division of Parks & Outdoor Recreation
550 W 7th Ave. Suite 1340, Anchorage, AK 99501

Recommended:

Rys Miranda, P.E. — Date
Chief, Design and Construction

Approved:

Ricky Gease — Date
Director, Alaska State Parks

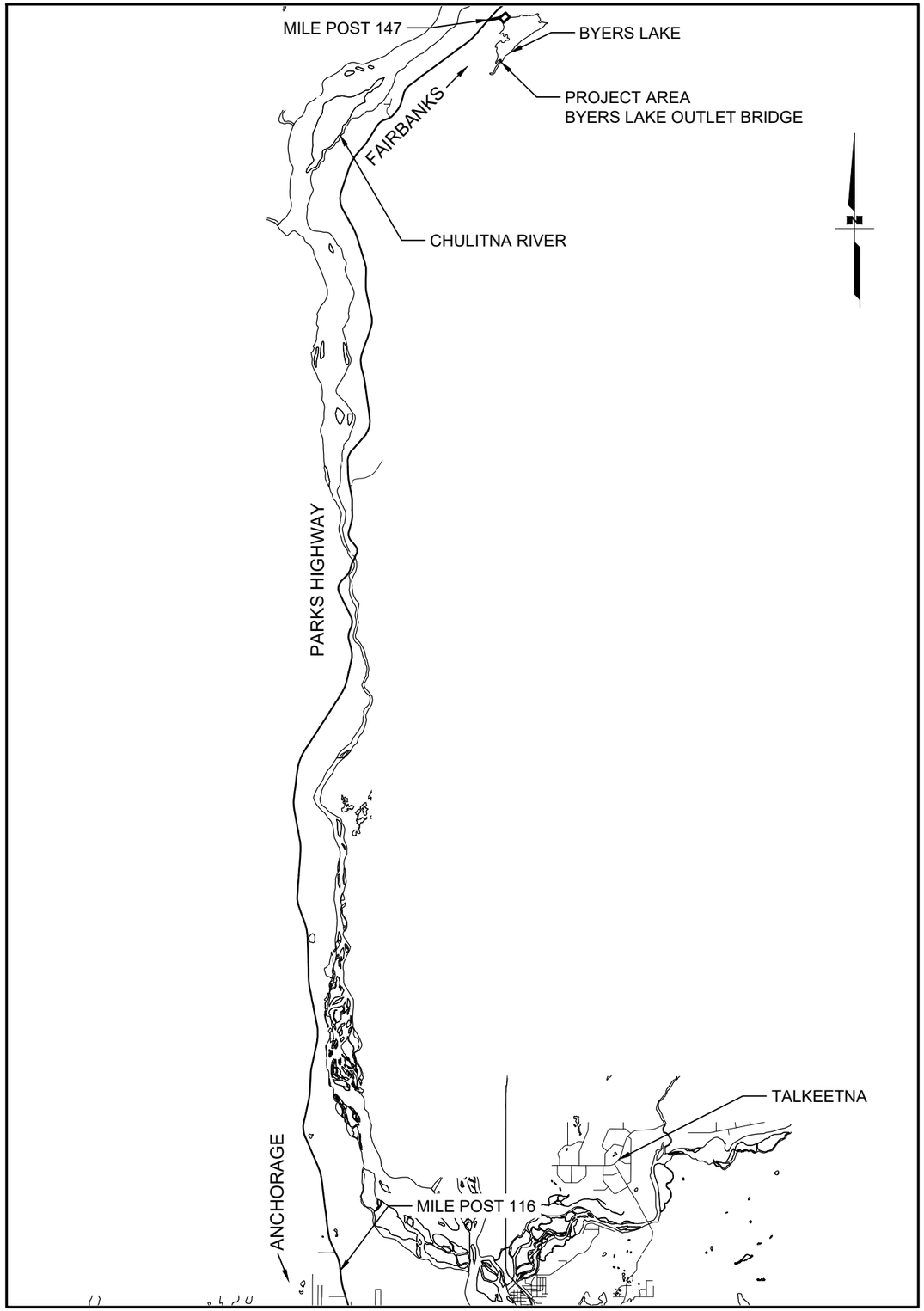

INDEX

SHEET NO.	DESCRIPTION
A1	TITLE SHEET
A2	VICINITY MAPS, AND INDEX
A3	LEGEND
C1	ESTIMATE OF QUANTITIES
N1-N2	BRIDGE DRAWINGS

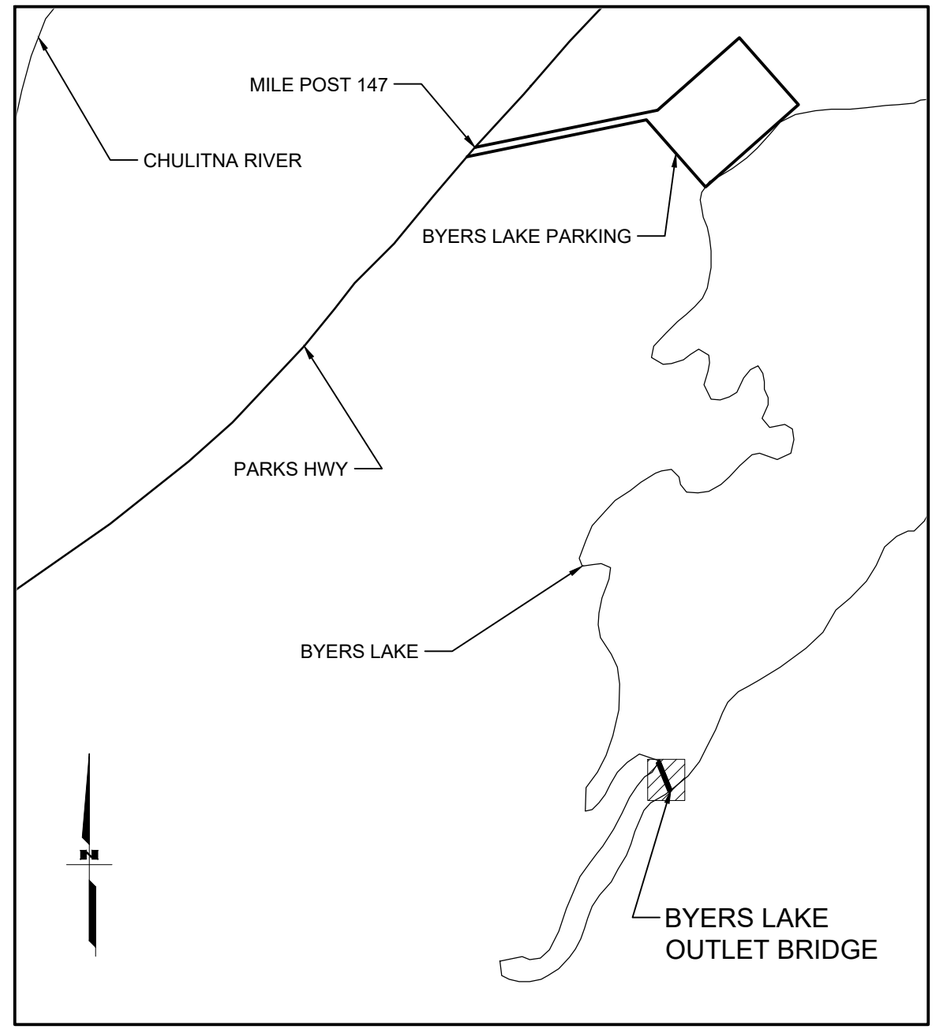

STATE OF ALASKA, DEPARTMENT OF NATURAL RESOURCES
2900 SPIRIT DR. SUITE 209, ANCHORAGE, AK 99508
PLANS DEVELOPED BY: AK-JAKE

DSP: BYERS LAKE
OUTLET BRIDGE REPLACEMENT
PROJECT NO. CED2022.03

PREPARED:
DRAWN:
REVIEWED:
DATE: MAY 2022

SHEET
A2
OF 1 SHEETS

PARKS STANDARD AMENITIES

- PICNIC TABLE
- WOOD BENCH
- ROUND FIREPIT
- BARRIER POST / REMOVABLE BARRIER POST
- BARRIER RAIL
- PARKING BUMPER
- ENTRANCE SIGN
- WASTE WATER HOLDING TANK
- SINGLE ENTRANCE GATE
- DOUBLE ENTRANCE GATE
- FEE PAYMENT STATION
- BULLETIN BOARD
- KIDS DON'T FLOAT KIOSK, TYPE A
- INTERPRETIVE SIGN, TYPE B
- INTERPRETIVE SIGN, TYPE C
- INTERPRETIVE KIOSK, TYPE A
- INTERPRETIVE KIOSK, TYPE B
- DUMPSTER SCREEN
- HAND PUMP WATER WELL & WATER TANK
- SANITARY DUMP STATION
- INTERPRETIVE KIOSK, TYPE C
- ORIENTATION KIOSK
- PICNIC SHELTER
- VAULTED TOILET
- CONCRETE VAULTED TOILET
- SINGLE CONCRETE VAULTED TOILET

TRAFFIC STRIPING

SOLID WHITE STRIPE	W
SOLID YELLOW STRIPE	Y
BROKEN WHITE or YELLOW STRIPE	W Y
DASH YELLOW STRIPE	Y
SOLID YELLOW STRIPE w/ BROKEN YELLOW STRIPE	Y

SURVEY

	RECOVERED	TO BE SET THIS PROJECT
GOV'T SECTION CORNER		
GOV'T SURVEY MONUMENT		
GOV'T CONTROL STA.		
PRIMARY MON. [BRASS/AL CAP]		
SECONDARY CORNER		
PRIMARY CENTERLINE MONUMENT		
SECONDARY CENTERLINE MON.		
SURVEY CONTROL POINT	CP	
GPS CONTROL POINT	GPS	
MONUMENTED BENCH MARK	MBM	
TEMPORARY BENCH MARK	TBM	
ROCK MONUMENT		
INTERNATIONAL BOUNDARY LINE	ALASKA / CANADA	
TOWNSHIP & RANGE LINE	T. 13 N. / T. 12 N. / R. 3 W. / R. 2 W.	
SECTION LINE		
1/4 SECTION LINE		
1/16 SECTION LINE		
PROJECT BOUNDARY		
PROJECT RIGHT-OF-WAY LINE	ROW	
EXISTING PROPERTY LINE		
CONTROLLED ACCESS LINE	C/A	
PERMIT LINE		
EXISTING EASEMENT LINE		
STATION EQUATION	STA. 14+33.22 BK. = STA. 16+90.17 AHD.	
PROJECT CENTERLINE	27+00	
EXISTING CENTERLINE		
HIGHWAY MILEPOST	6.5 / 23+12.56	
RAILROAD MILEPOST	R.R. 2580+60 / HWY. 126+33 / 842	

UTILITIES

	EXISTING	PROPOSED
MANHOLE	M.H.	M.H.
FIRE HYDRANT		
METER		
VALVE		
PIPE CULVERT w/ END SECT.		
UTILITY POLE		
ELECTROLIER		
UTILITY POLE WITH LUMINAIRE		
POLE ANCHOR /w GUY		
TRANSMISSION TOWER [WOOD]		
TRANSMISSION TOWER [STEEL]		
ELECTRICAL OUTLET		
ELECTRICAL PEDESTAL		
TELEPHONE PEDESTAL		
CABLE T.V. PEDESTAL		

	EXISTING	PROPOSED
PIPELINES:		
SANITARY SEWER	SS	SS
OIL	O	O
GAS	G	G
WATER	W	W
STORM DRAIN	SD	SD
JUNCTION BOX, TYPE I		
JUNCTION BOX, TYPE II		
JUNCTION BOX, TYPE III		

	EXISTING
TELEPHONE	
(OVERHEAD)	OT
(DIRECT BURY)	UT
ELECTRIC	
(OVERHEAD)	OE
(DIRECT BURY)	UE
FIBER OPTIC	FO
U.G. CABLE	TV
U.G. DUCT	

CIVIL

- ROADWAY OBLITERATION
- LIMIT OF CUT SLOPE
- LIMIT OF FILL SLOPE
- FENCE
- ROCKERY WALL
- HEAD & WINGWALLS
- GUARD RAIL — EXISTING / PROPOSED
- RETAINING WALL
- TUNNEL
- INTERMITTENT DRAINAGE
- INTERCEPTOR DITCH
- MARSHLAND/SWAMP
- RIVER / CREEK / LAKE EDGE
- TANK VENT
- SEPTIC — WELL
- WELL — SEPTIC
- TANKS
  - Above Ground
  - Below Ground
- SIGN
- LANDSCAPE LIGHT
- DECIDUOUS TREE
- CONIFER TREE
- SHRUB
- BARRIER ROCK / SEAT ROCK

	EXISTING	PROPOSED
SIDEWALK		
CONCRETE CURB		
CONCRETE CURB & GUTTER		
DRIVEWAY, APPROACH, & SIDEDRAIN		
BRIDGE		
RIPRAP		
BUILDING		
FOUNDATION		
ROADWAY		
EXISTING		
PROPOSED		

STATE OF ALASKA, DEPARTMENT OF NATURAL RESOURCES
2900 SPIRIT DR. SUITE 209, ANCHORAGE, AK 99508
PLANS DEVELOPED BY: AK-JAKE

DSP: BYERS LAKE
OUTLET BRIDGE REPLACEMENT
PROJECT NO. CED2022.03

PREPARED:
DRAWN:
REVIEWED:
DATE: MAY 2022

SHEET A3
OF 1 SHEETS

ESTIMATE OF QUANTITIES

ITEM NO.	ITEM DESCRIPTION	PAY UNIT	TOTAL QUANTITY
202.0023.0000	REMOVAL OF BRIDGE	L.S.	1
202.0023.0000	REPLACE EXISTING BRIDGE	L.S.	1
203.0003.0000	UNCLASSIFIED EXCAVATION	C.Y.	75
203.0006.0000	BORROW	TON	1
301.0003.00F1	AGGREGATE SURFACE COARSE, GRADING F-1	TON	3
501.0007.0000	PRECAST CONCRETE MEMBER (FOOTER)	EACH	7
607.0003.0008	CHAIN LINK FENCE	L.F	480
611.0002.0001	RIPRAP, CLASS I	TON	7
633.0001.0000	SILT FENCE	L.F.	367
640.0001.0000	MOBILIZATION AND DEMOBILIZATION	L.S.	ALL REQ'D
641.0001.0000	EROSION, SEDIMENT, AND POLLUTION CONTROL ADMINISTRATION	L.S.	ALL REQ'D
641.0005.0000	TEMPORARY EROSION, SEDIMENT AND POLLUTION CONTROL BY DIRECTIVE	C.S.	ALL REQ'D
641.0007.0000	SWPPP MANAGER	L.S.	ALL REQ'D
642.0001.0000	CONSTRUCTION SURVEYING	L.S.	ALL REQ'D
642.0003.0000	THREE PERSON SURVEY PARTY	HOUR	XXX
644.0001.0000	FIELD OFFICE	L.S.	ALL REQ'D
644.2002.0000	ENGINEERING COMMUNICATIONS	C.S.	ALL REQ'D
647.2002.0000	BACKHOE, 4WD, 1 CY BUCKET, 75 HP MIN, 15 FT DEPTH	C.S.	ALL REQ'D

TABLE OF ESTIMATING FACTORS

ITEM NO.	ITEM DESCRIPTION	UNIT
203.006.0000	BORROW	144 LB./C.F.
611.0002.0001	RIPRAP, CLASS I	108 LB./C.F.

STATE OF ALASKA, DEPARTMENT OF NATURAL RESOURCES
PLANS DEVELOPED BY: AK-JAKE
2900 SPIRIT DR. SUITE 209, ANCHORAGE, AK 99508

DSP: BYERS LAKE
OUTLET BRIDGE REPLACEMENT
PROJECT NO. CED2022.03

PREPARED:
DRAWN:
REVIEWED:
DATE: MARCH 2022

SHEET
C1
OF 1 SHEETS

STATE	PROJECT DESIGNATION	YEAR	SHEET NO.	TOTAL SHEETS
ALASKA	CED 2022.03	2022	N1	3

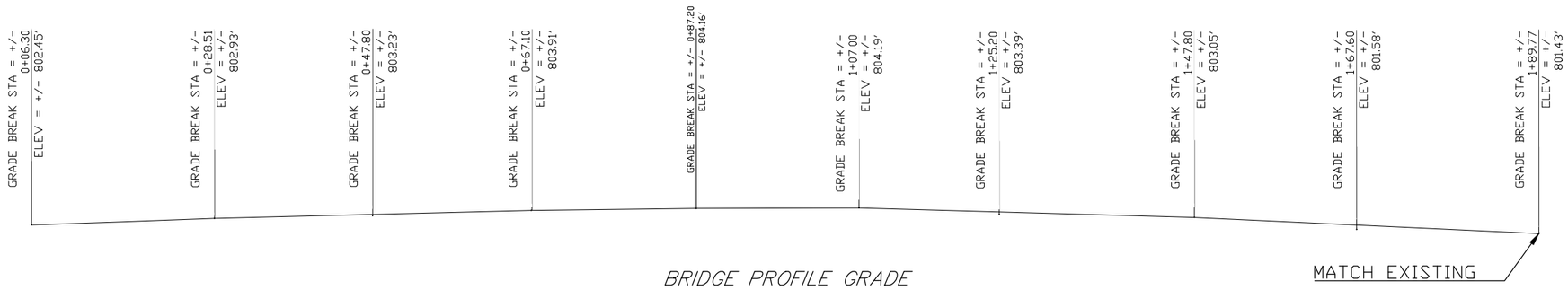

BRIDGE PROFILE GRADE

NOTES

1. CUT WOOD GIRDERS TO LENGTH ONSITE
2. ALL WOOD IS PRESSURE TREATED
3. STRUCTURAL STRAPS TWO MIN FOUR MAX
4. GIRDERS BUTTED AT ENDS
5. EXTRA STRAPS WILL BE APPLIED TO GABION PIERS WHERE NEEDED

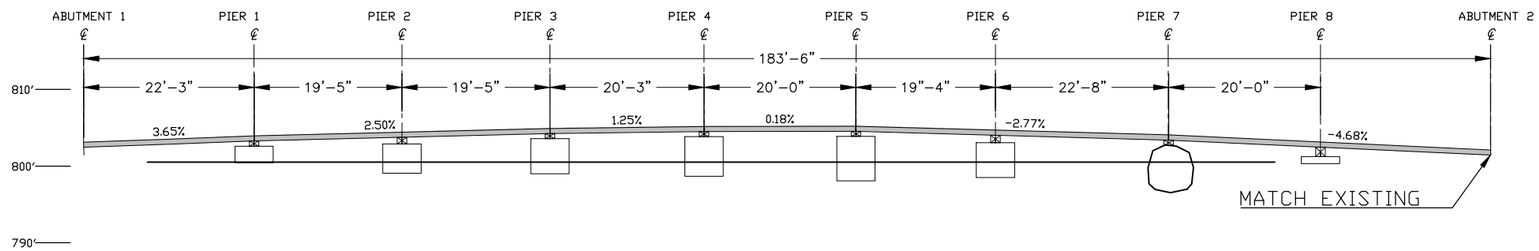

ELEVATION
SCALE 1":10'

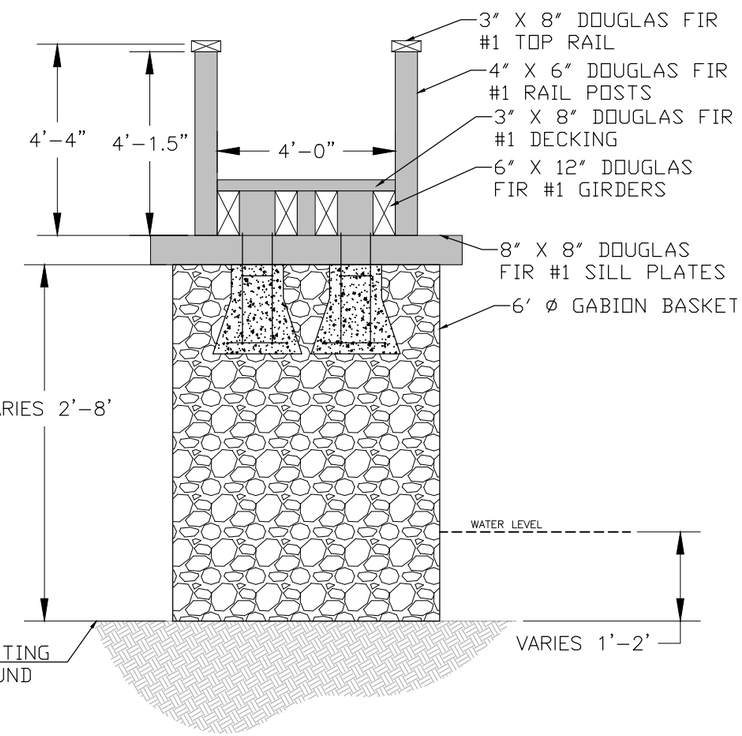

TYPICAL SECTION

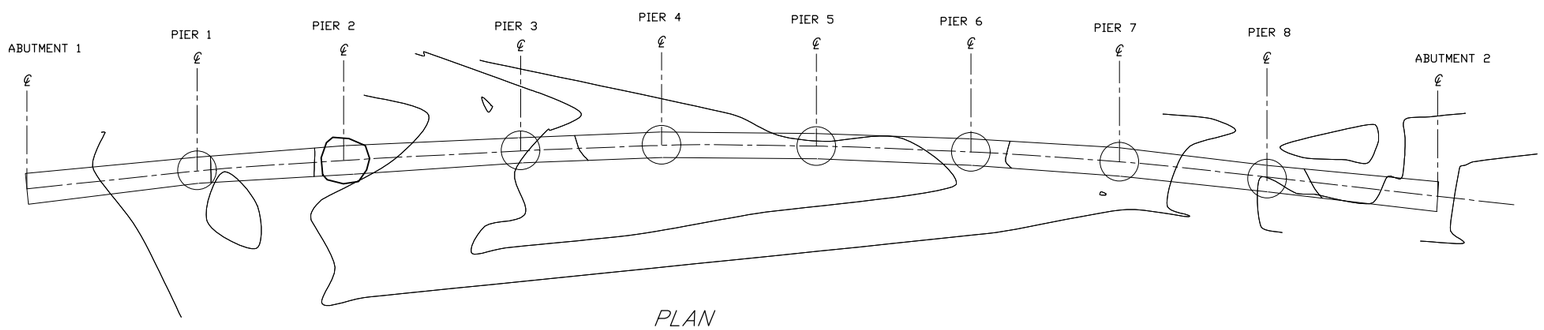

PLAN
SCALE 1":10'

DESIGNED BY: Designed	CHECKED: Checker	LAYOUT BY: Designed	CHECKED BY: Checker
DRAWN BY: Drafter	CHECKED: Designed	SPECIFICATIONS BY: Designed	P S & E COMPARED: Checker
QUANTITIES BY: Designed	CHECKED: Checker	APPROVAL RECOMMENDED BY: Engineer	

AK-JAKE
2900 SPIRIT DRIVE SUITE 209
ANCHORAGE, AK 99503
907-250-5195

DENALI STATE PARK BYERS LAKE
OUTLET BRIDGE REPLACEMENT
GENERAL LAYOUT

BRIDGE NO.
DWG. NO.

E:\School\Spring 22\Senior Design\CAD\Final Drawings\CED 2022.03_Bridge-GENERAL LAYOUT Tue, Apr/12/22 12:03pm

STATE	PROJECT DESIGNATION	YEAR	SHEET NO.	TOTAL SHEETS
ALASKA	CED 2022.03	2022	N2	3

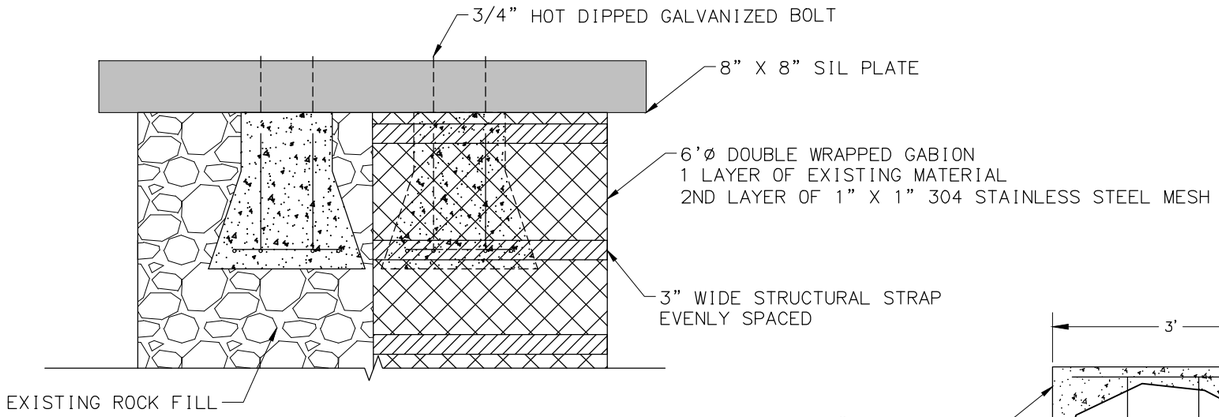

MODIFIED GABION PIER DETAIL

1":1'

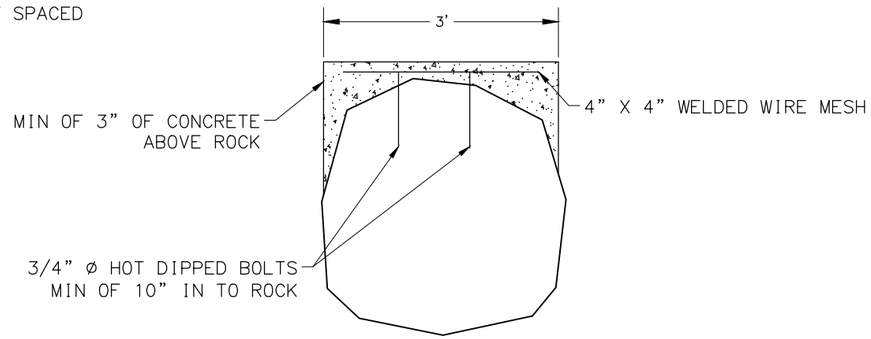

ROCK PIER FOOTER DETAIL

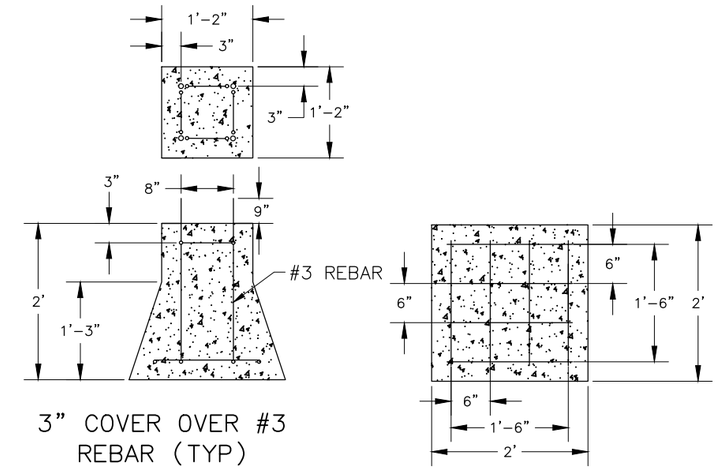

CONCRETE FOUNDATION

1":2'

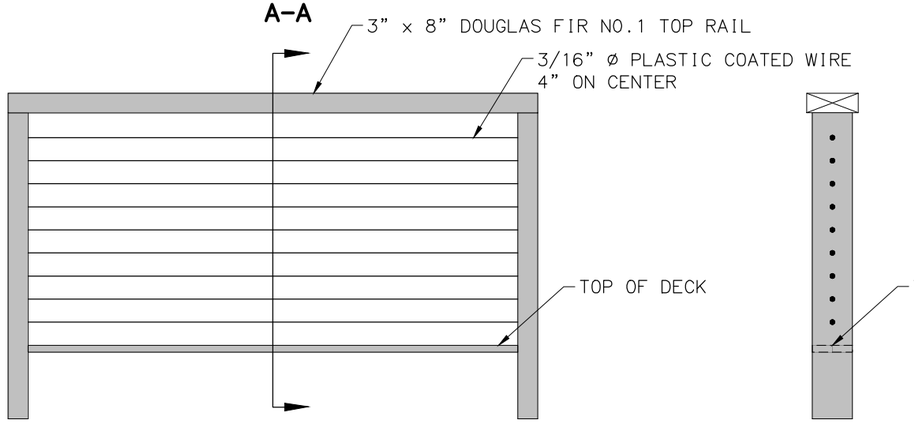

CABLE RAILING DETAIL

1":1'

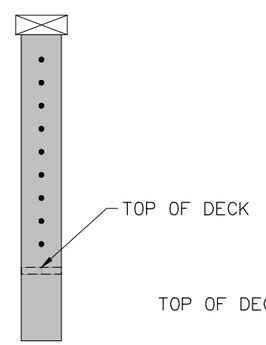

SECTION A-A

1":1'

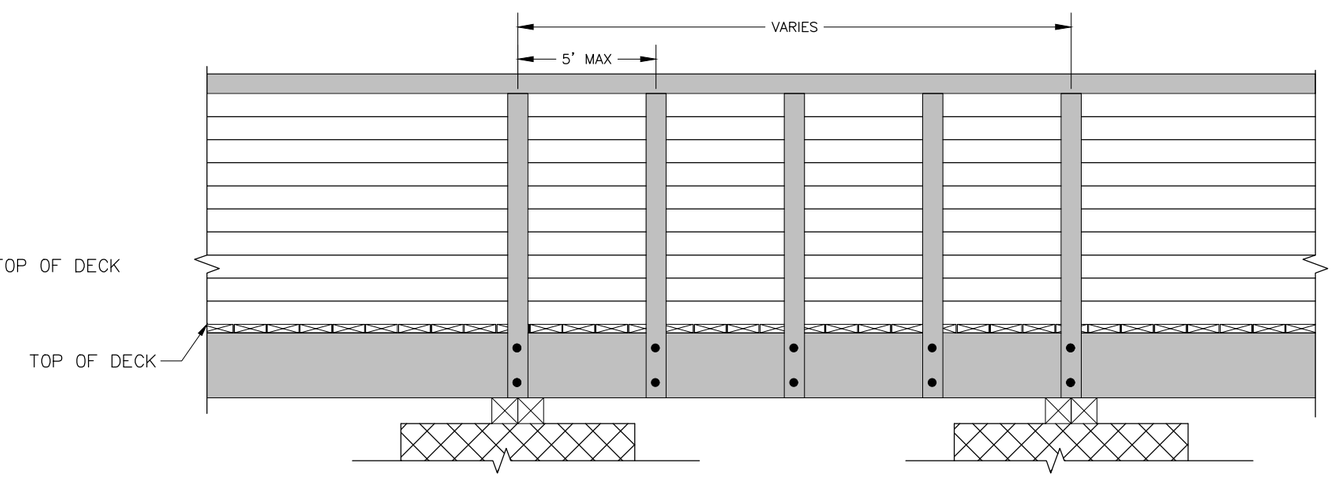

GIRDER BOLT, AND RAILING POST DETAIL

1":5'

DESIGNED BY: *Designed*	CHECKED: *Checker*	LAYOUT BY: *Designed*	CHECKED BY: *Checker*
DRAWN BY: *Drafter*	CHECKED: *Designed*	SPECIFICATIONS BY: *Designed*	P S & E COMPARED: *Checker*
QUANTITIES BY: *Designed*	CHECKED: *Checker*	APPROVAL RECOMMENDED BY:	*Engineer*

AK-JAKE
2900 SPIRIT DRIVE SUITE 209
ANCHORAGE, AK 99503
907-250-5195

DENALI STATE PARK BYERS LAKE
OUTLET BRIDGE REPLACEMENT
DETAILS

BRIDGE NO.
DWG. NO.

E:\School\Spring 22\Senior Design\CAD\Final Drawings\CED 2022.03_Bridge-CONNECTION DETAILS Tue, Apr/12/22 12:09pm

STATE	PROJECT DESIGNATION	YEAR	SHEET NO.	TOTAL SHEETS
ALASKA	CED 2022.03	2022	N3	3

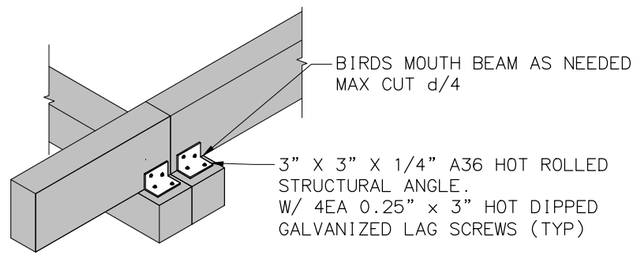

GIRDER TO SILL

1:1

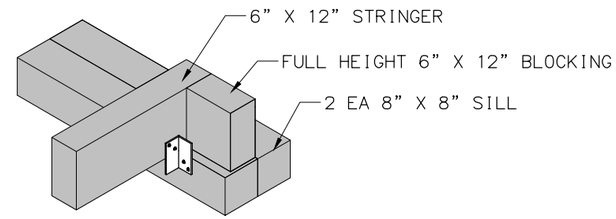

GIRDER TO SILL WITH FULL WIDTH BLOCKING

1:1

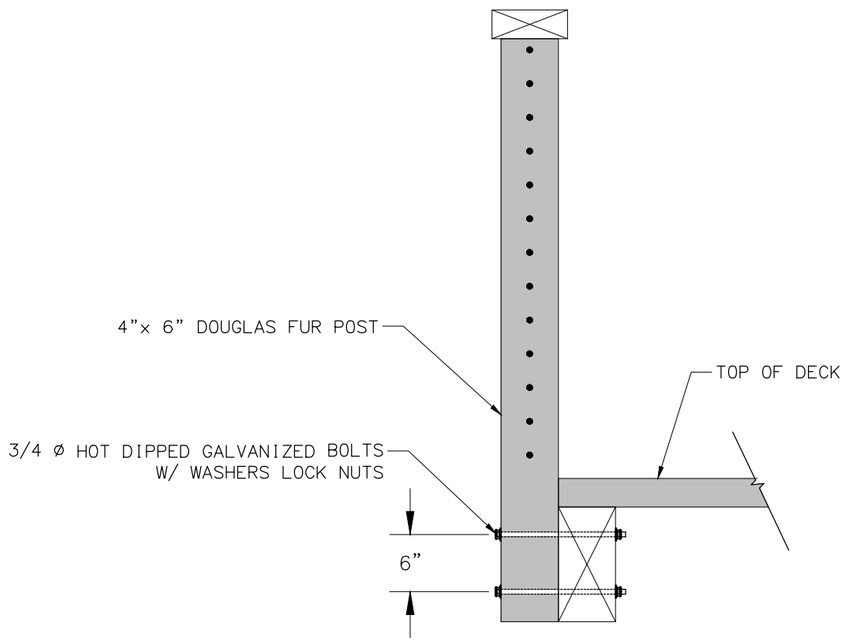

RAILING POST TO GIRDER

1:1

DESIGNED BY: *Designed*	CHECKED: *Checker*	LAYOUT BY: *Designed*	CHECKED BY: *Checker*
DRAWN BY: *Drafter*	CHECKED: *Designed*	SPECIFICATIONS BY: *Designed*	P S & E COMPARED: *Checker*
QUANTITIES BY: *Designed*	CHECKED: *Checker*	APPROVAL RECOMMENDED BY: *Engineer*	

AK-JAKE
2900 SPIRIT DRIVE SUITE 209
ANCHORAGE, AK 99503
907-250-5195

DENALI STATE PARK BYERS LAKE

OUTLET BRIDGE REPLACEMENT

DETAILS

BRIDGE NO.

DWG. NO.

E:\School\Spring 22\Senior Design\CAD\Final Drawings\CED 2022.03_Bridge-CONNECTION DETAILS (2) Tue, Apr/12/22 12:03pm