Glenn Highway: Hiland to Artillery Capacity Improvement

Civil Engineering Program
University of Alaska Anchorage

Glenn Hwy Capacity Improvement

Overview

The section of the Glenn Highway between the Hiland Road and the Artillery Road interchanges is currently inadequate for the present capacity of the highway. Thus, a new highway alignment increasing the number of lanes and reducing the grade is needed. This new alignment will have a design life of at least 20 years.

Project Location

Scope

- Reduce congestion
- Reduce delays
- Two Phase Project:
- Phase I: Northbound
  - Grade reduction from 6% to 4%
  - Construct new bridge
  - Increase from 2 to 3 lanes
  - Connect frontage roads
- Phase II: Southbound

Alignment Selection

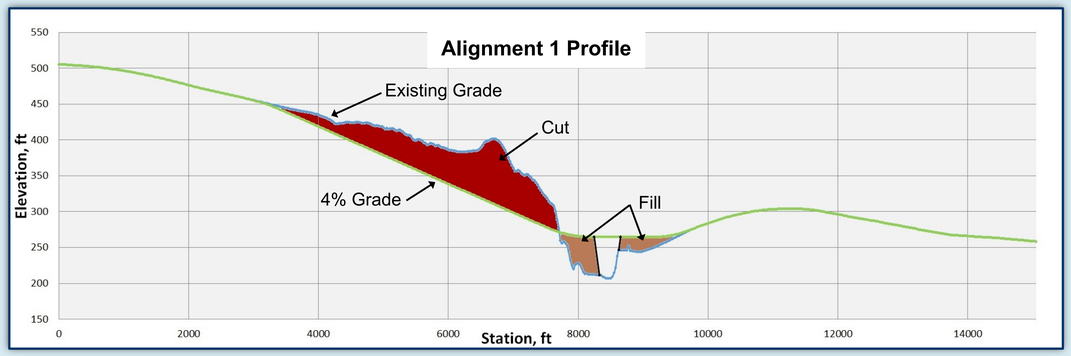

Geotechnical

Total cut amount:	1.40 million CY
Total fill amount:	0.25 million CY
Excess material amount:	1.15 million CY
Clearing & grubbing:	14.7 acres

Shannon & Wilson, Inc. subsurface exploration material findings:

- silty sand with gravel
- silty gravel with sand
- thick clay layers near river

Slope Stability & Erosion Control

Along Roadway

- foreslope 6:1 (H:V)
- backslope of 2:1 (H:V)

Along River

- slope of 1.5:1 (H:V)
- rip-rap around river for 100-year flood

Riprap Along Existing NB Eagle River Bridge

Environmental Permits

Agency	Permit
U.S. Army Corps of Engineers	USACE Section 404
U.S. Coast Guard	USCG Section 9
Alaska Dept. of Fish and Game	Fish Habitat
Alaska Dept. of Natural Resources	Temporary Water Use
Alaska Dept. of Natural Resources	Cultural Resource SHPO
Alaska Dept. of Environmental Conservation	Alaska Pollutant Discharge Elimination System
Municipality of Anchorage	Flood Hazard

Hydraulics & Hydrology

A French drain system will be installed along the selected alignment. The system will collect the groundwater from the highway, then drain into the Eagle River. The permanent groundwater drainage system that will be used will be a French drain system.

The system will consist of:

- 10 ft deep by 4 ft wide trench
- 2 in-3 in drainage rock
- 12 in diameter perforated PVC pipe

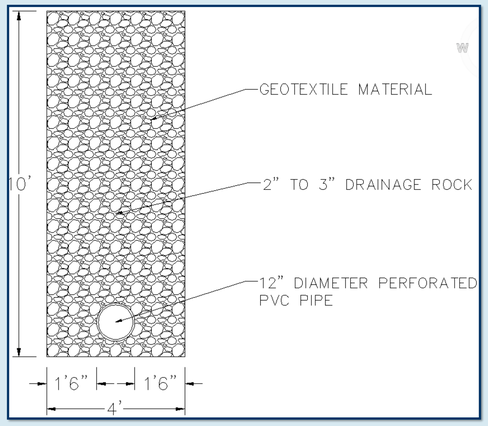

Glenn Highway: Hiland to Artillery Capacity Improvement

Civil Engineering Program
University of Alaska Anchorage

Glenn Hwy Capacity Improvement

Utilities

The main utility conflict with the proposed alignment is the ENSTAR natural gas line that runs between the existing NB and SB lanes. Relocation of line is required prior to beginning construction.

- replace 4,600ft of existing line
- relocate 4,350 of new gas line to west side of existing SB lane
- replacement cost $4 million

Pavement Design

Mainline Pavement

A flexible pavement is recommended for the Project. Flexible pavements have a system of layers that act together to distribute repeated loadings and withstand tough environmental conditions.

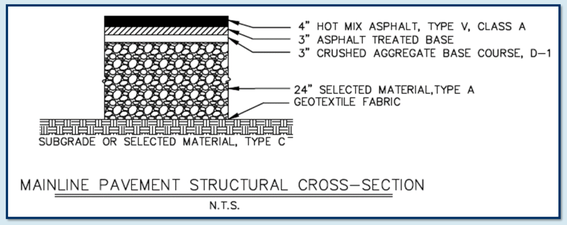

Major Structure Pavement

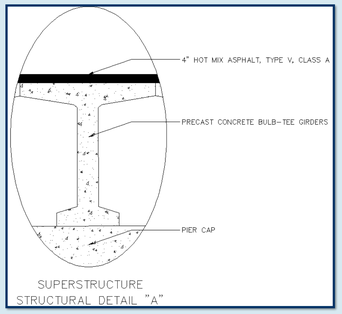

Typical Highway Cross-Section

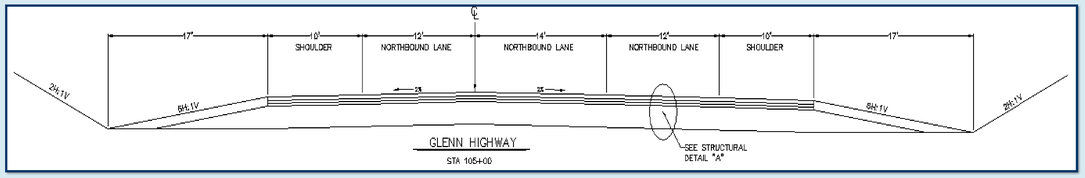

Major Structures

A new three lane bridge spanning the Eagle River will be constructed within the Project boundaries. The structure will consist of:

- 415 ft by 61 ft, bridge deck
- pre-cast and pre-stressed concrete bulb-tee girders
- cantilever piers will rest on six 4 ft diameter piles
- an additional 10 ft of pile cap length to allow for future deck expansion

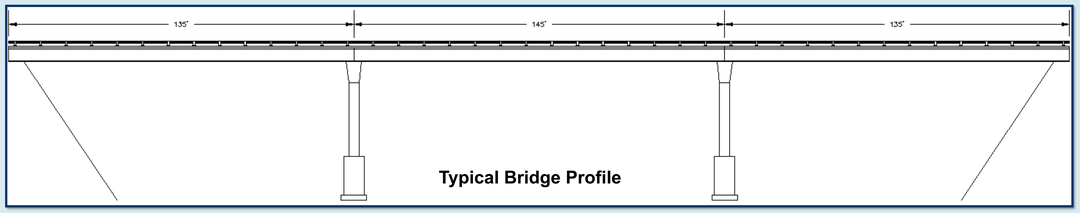

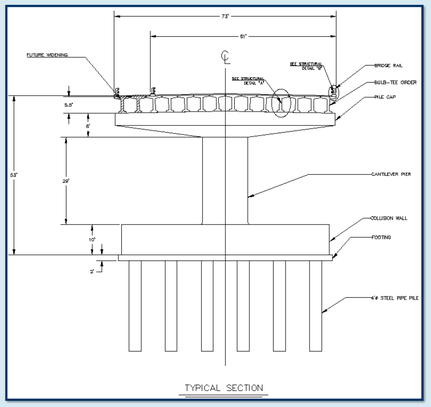

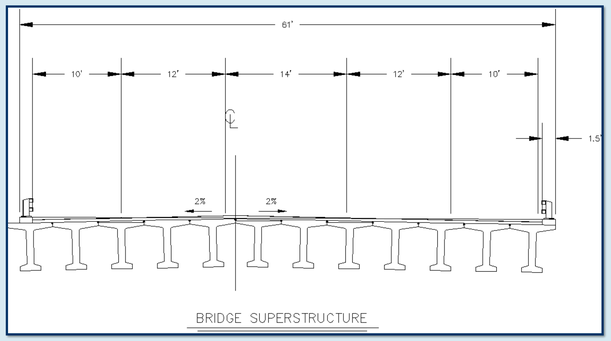

Cost Estimate

Total Project Cost	
Estimate of Quantities Total	$22,515,000
Utility Relocation	$4,000,000
Contingency (20%)	$4,503,000
Construction Costs and Engineering (15%)	$3,377,000
Design Engineering	$2,000,000
Subtotal:	**$36,395,000**
ICAP (4.79%)	$1,743,000
Total Project Cost:	**$38,138,000**

Public Involvement

The objective of public involvement is to identify the concerns of the general public, local entities and agencies in regards to the proposed Project design.

Public Involvement Plan

- maintain up-to-date project website (www.eagleriverbridgenb.com)
- notify stakeholders and the public of progress
- hold project open-house meetings
- address public comments and concerns

Primary Concerns

- artillery road interchange
- impact on commute during construction
- noise impact
- existing highway
- funding for southbound improvement

Team

Ryan Bergerson, Ali Chaudhry, Clayton Choromanski, Danielle Dance, Ashley DeVore, Michael Fefelov, Chris Feller, Joe Miller, Matt Muniz, Candy Sims, Paul Song

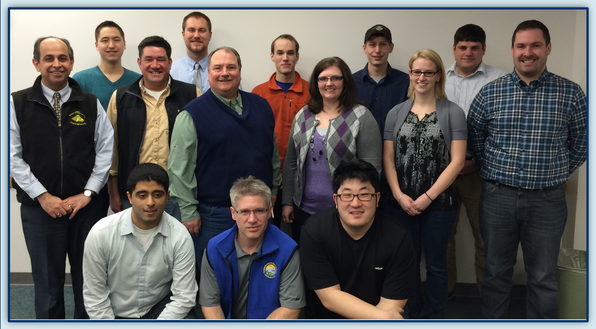

Mentors:

Osama Abaza, Robert DeVassie, Brian Schumacher, Paul Witt

UAA

Transportation & Public Facilities · State of Alaska