Chukchi Sea Weather Station

CE 438 – Design of Civil Engineering Systems

Prepared by:
Tim Samuelson – Project Manager
David Hoisington – Project Engineer
Jaime Bronga
Robert Halcomb
Phillip Hearn
Chris Wiehe

School of Engineering
University of Alaska Anchorage
3211 Providence Drive
Anchorage, AK 99508

Spring 2012

Table of Contents

List of Figures

List of Equations

List of Tables

Abstract

Design of the weather station in the Chukchi Sea for ConocoPhillips Alaska was accomplished as part of a design project by six senior Civil Engineering students at the University of Alaska Anchorage. The main assignment required a design study report and a plan set expanded from the previous team's work to about 60%. The design of the weather station was completed accordingly. It is generally the practice to gather air quality data in order to obtain an air quality permit for oil and gas exploration. For the purpose of this project, air quality and weather data in the Chukchi Sea would need to be collected over a year's time. To do so, a structure will need to be constructed offshore and be able to withstand substantial environmental loads. This structure will house the required weather station equipment, a power source that produces very little emissions, and a helipad with reserve fuels. A group of students in 2011 began the design process and brought the design to 30%. The 2012 design project was to expand on that design and bring it to 60%. The design process for the structure was quite a challenge due to its small size, location, and the extreme conditions that exist in the Chukchi Sea.

The proposed structure would be constructed at coordinates 71˚N 165˚W, approximately 114 miles northwest of Wainwright, Alaska. At this location, water is at a depth of 116 feet, and soil is fairly poor for construction purposes, consisting primarily of fine silty sands and hard lean clays. Stiff clay is encountered about 50 feet into the soil. The foundation of the structure will need to extend into the stiff clay layer, and was designed to be a rectangular configuration of four suction caissons to increase the ease of installation, economic viability of the project, and reduce the necessary penetration depth.

The environmental loads considered in the design include ice, wave, current and wind. Each of these can again be broken down into more detail based on the magnitude of the force for different parts of each kind of force, the load pattern, and

when the load will be applied. The loading on the structure will vary drastically depending on the season. Mainly there will be little to no ice loading occurring in the summer and when ice cover is almost complete (90% coverage) it will prevent large wave from developing, decreasing water loading. The loading applied to the structure was calculated based on data and advice supplied by ConocoPhillips and other engineering firms and experts in Alaska.

After lateral loads were identified and analyzed, the design of the substructure and foundation was completed using structural analysis for the different alternatives. The selected alternative was sized appropriately to withstand the large environmental force of ice (1200 kips) and support the platform 50 feet above the surface of the water. The final proposed design includes four sections: the platform designed by the student team from 2011, the superstructure, the substructure, and the caisson foundation. The superstructure is a reinforced concrete column broken into two parts. The top section has a 6 feet diameter and is 58 feet long. The bottom section has a 10 feet diameter and is 58 feet long. They are connected in the middle by a 4 foot tall, 12 feet in diameter concrete disk surrounded with steel intended to cause ice to fail in bending rather than impact.

The substructure consists of four steel 3D truss legs arranged in tetrapod. The height from the top of the angled trusses to the sea floor is 41 feet. The members of the trusses selected are designed to transfer the large ice load from the column into the foundation. The foundation consists of four steel suction caissons that attach to each leg of the substructure. They will be 44.3 feet in diameter and 80 feet long. They will be installed using a combined technique of self-weight and suction. These caissons were designed to resist the applied compressive loads, applied lateral loads, and applied tensile loads with a factor of safety of 1.5.

The plan for the construction of the weather station in the Chukchi Sea will occur in the summer months when there is open sea. Construction will utilize a large crane barge that can accommodate the size of the entire structure and has a crane that has

the capacity to lift the individual sections and lower them into place. The structure will be transported on this barge from the fabricator to location.

The estimated cost of the entire project is $135 million.

The project structure simulated an engineering firm and utilized a partnership with ConocoPhillips Alaska. The professor acted as the firm president, a mentor at ConocoPhillips acted as vice president, and students took roles as project managers, project engineers, and were members of technical teams. During the semester's work, the knowledge and skills learned in the civil engineering curriculum were expanded upon, multi-disciplinary teams were formed to solve problems, the responsibilities of a practicing engineer were identified, the idea that continuing education in the field of civil engineering is necessary was recognized, and the ability to communicate effectively through reports, drawings, and presentations was displayed, fulfilling the outcomes for the course.

Introduction

The Chukchi Sea is a relatively shallow water body connected to the Arctic Ocean, in between northwestern Alaska and Siberian Russia, extending down to the Bering Strait. The Chukchi Sea is also bounded by the Beaufort and East Siberian Seas to the east and west respectively (see Figure 1).

Figure 1: Map of the Chukchi Sea (Wikipedia, 2011)

The Chukchi Sea has a fairly short open-water season, which is only about four months per year. Its shallow waters and seasonal ice pack create a bountiful habitat for a vast amount and variety of marine life. It is "one of the most productive ocean ecosystems in the world" (Audubon, 2011), and is home to walrus, seals, whales, millions of sea birds, and the threatened polar bear. The ice edges produce phytoplankton, an important food source at the bottom of the food chain. The sea floor also contains rich nutrients, resulting in the flourishing of bottom-dwelling marine life.

The shallow waters and latitude of the Chukchi Sea allows for it to contain ice the majority of the year; however, signs of global warming have increased melting

significantly. The melting of the ice pack is allowing for more commercial fishing and oil/gas exploration and extraction in the area. "In February of 2008, in its first lease sale in nearly 20 years, nearly three million acres in the Chukchi Sea were sold for over $2.6 billion" (Audubon, 2011).

With the increase in activity in the Chukchi Sea, more specifically, oil and gas exploration, the extent of ice loads, soil data, and other extreme weather conditions are being researched and analyzed. This includes ice thickness, ice ridge heights, ice keel depths and quantities, quality of the soils for structural design, wind data, wave heights, and current speeds. Not much is known in terms of wind, wave, and ice for the Chukchi, so if a project of this scale were to be moved forward, further investigation into environmental conditions would be necessary.

Facilities will need to be built as more companies move to explore the oil and gas extraction possibilities in the Chukchi Sea. In this design study, a weather monitoring station will need to be constructed in order to gather data and gain an air quality permit. The design of the structure will be very unique due to the extreme conditions and its purpose, being that the size requirement is relatively small compared to standard drilling rigs.

As someone reads this report they might begin to wonder why a company would want to go through so much trouble to develop any area so difficult to access and work in, let alone build a multimillion dollar structure just to collect year round data. The fact is that a weather station such as the one being studied in this report is one of the stepping stones to be able to successfully develop the oil and gas resources in the Chukchi Sea. Not only would the weather station gather the appropriate environmental data needed to obtain the proper permits for working in the area, but it would also give future designers and developers a more detailed set of data for the ice and wave conditions in the winter months.

Development of the resources in the Chukchi Sea is not only important for companies such as Conoco Phillips, but for all residents of the State of Alaska. State taxes on North Slope oil currently provides approximately 90% of the State's revenue, and in turn funding for many of the services that we all depend on from the state. Alaskans should be concerned by this considering that production on the North Slope has been declining for several years now. Diminishment of these wells on land has forced drilling companies to begin to move offshore to tap into the resources in the Beaufort and Chukchi Seas. Without getting into too much further detail, if these resources aren't developed and routed to the pipeline before it becomes too cost prohibitive to operate (from effects of low oil flow), transport of these resources may not come into contact with Alaska at all, considering their location within Federal waters. The need for swift development is important.

Study Methodology and Approach

The weather station in the Chukchi Sea is set to be located at coordinates 71˚N 165˚W. Knowing this, soil analysis for that area was done. This report will analyze the environmental data for the proposed location, compare several alternatives, and give a proposed design for the favorable alternative based on cost, constructability, and useful life.

Configuration

Many different alternatives were analyzed for the design of the weather station platform in the Chukchi Sea. These alternatives have different types of substructures and ice breakers. The purpose of the weather station is to gather air quality and weather data for one year. To do so the structure must withstand large loads from wave, wind, and ice. The complete structure has been broken up into four different parts. Part one is the substructure with the use of caissons for the foundations. The caissons method is relatively new to the world of offshore structures but is greatly gaining ground due to ease of installation and removal.

The next part is the superstructure part B which goes from the connection to the substructure to half of the ice breaker. It was cut there to help make sure the ice breaker will be completely filled with the concrete during the installation. The following part is the superstructure part A that goes from the ice breaker to the top of the column where the platform will be installed. The last piece is the platform which will house all of the computers and the data storage. The platform will also have a helicopter pad on top for ConocoPhillips to be able to collect the information and provide maintenance to the system.

An important component that is of the structure as a whole is mobility. Since the structure is only needed for one year, it would be ideal for the structure to be pulled up and relocated to be used for another weather station in a different location. Different uses have been considered, such as: a weather station in a different geographical location, oil spill response, research, power generation, and more.

Loading Conditions

Load Combinations

The Chukchi Sea presents unique loading conditions for a marine structure. Some of the most extreme weather in the world occurs offshore at northern latitudes. For the purpose of the report the loads that are being considered are ice loading, wind loading, and water loading. Each of these can again be broken down into more detail based on the magnitude of the force for different parts of each kind of force, the load pattern, and when the load will be applied. The loading on the structure will vary drastically depending on the season. Mainly there will be little to no ice loading occurring in the summer and when ice cover is almost complete (90% coverage) it will prevent large wave from developing, decreasing water loading.

The most unique loading condition in the Chukchi Sea is the ice. During the year the ice coverage can fluctuate between zero percent coverage to greater than 90 percent coverage. The extreme loading condition that is considered in the design of the structure is the latter case, when ice coverage is almost complete. The condition that will present the extreme load is that of a so-called ice ridge. Ice ridges form when level ice sheets on the ocean collide and crush against each other, not unlike tectonic plates on the earth's crust. When the level ice sheets crush against each other, it forces ice upward into a sail and also downward into what is called keel ice. A typical ice ridge with labeled parts is displayed in Figure 2.

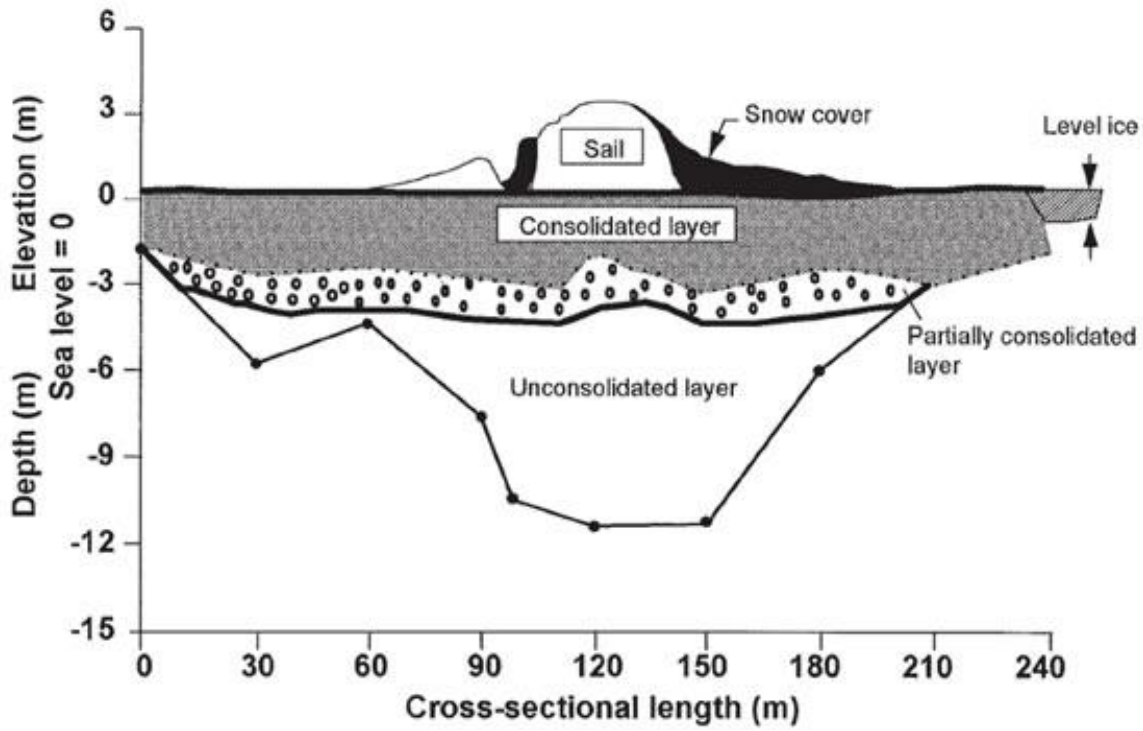

Figure 2: Example Ice Ridge

The unconsolidated layer in the figure will be referred to as keel ice for this report. The portion of the ice ridge that was most crucial for this structure was the consolidated layer. The level ice sheets and ridges shift in the Chukchi Sea in every direction so the ice ridges will come in contact with the structure while in motion. The structure must pass through the ice ridge withstanding crushing forces against the structure, shear and moment forces throughout the structure, and overturning force about the base of the structure. The methods for ice load determination are detailed in the Ice Conditions, Properties, and Analysis section. A snapshot of sea ice in the Chukchi Sea is provided in Figure 3.

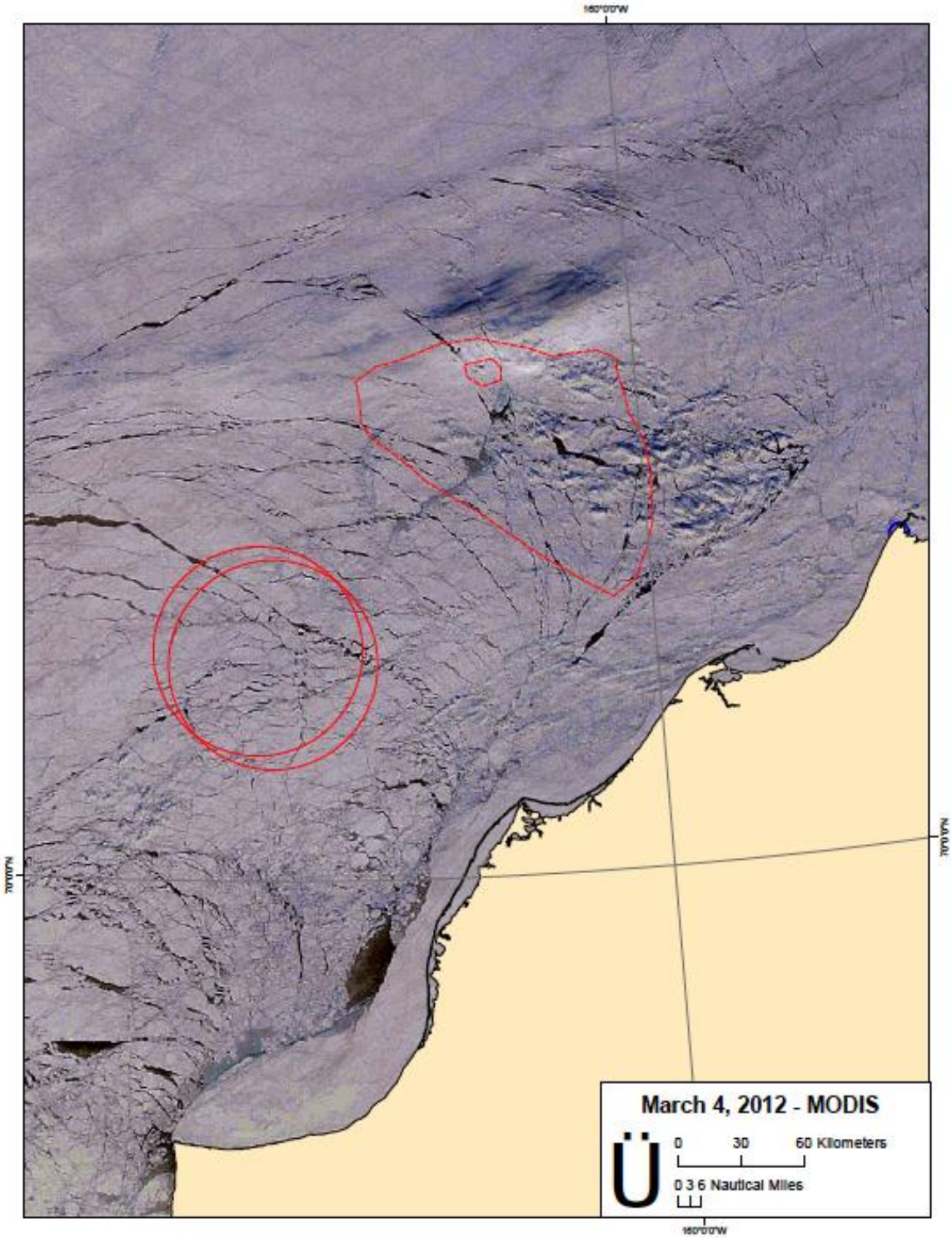

Figure 3: Satellite Image of Ice Conditions in Chukchi Sea

Wind loading on the structure was also determined but is less unique and is smaller in magnitude than the ice loading. This report will assume that maximum wind can occur at any time of year. The methods for wind load determination are detailed in the Wind Conditions and Analysis section.

Water loading consists of wave loading and current loading. Weather in the Chukchi Sea is extreme and powerful storms occur that yield massive waves. The platform of the structure must be above the height of a probable wave and the lateral force of the wave must not damage the structure. Wave loading is a function of wave height, wavelength, and wave period and is applied as a distributed load along height of the wave. This report assumes that maximum waves will only occur when the Chukchi Sea is free of ice. The methods for wave load determination are detailed in the Wave Conditions and Analysis section. Current loading is similar to wave loading in that it is a lateral force acting as a distributed force along the submerged length of the structure. Current is at a maximum near the surface of the water and diminishes by depth. This report assumes that maximum current can occur at any time of year. The methods for current load determination are detailed in the Current Conditions and Analysis section.

For the purposes of this report, two possible load combinations were considered:

Equation 1a: Load combination 1.

$$Force = 1.2Dead + 1.0Ice + 1.0Wind + 1.0Current$$

Equation 1b: Load combination 2.

$$Force = 0.9Dead + 1.0Ice + 1.0Wind + 1.0Current$$

Equation 2: Load combination 3.

$$Force = 1.2Dead + 1.0Wave + 1.0Wind + 1.0Current$$

Equation 2b: Load combination 4.

$$Force = 0.9Dead + 1.0Wave + 1.0Wind + 1.0Current$$

After investigations into loading conditions is has been established that the governing load combination is load combination 1. For the purposes of this report, ice, wind, wave, and current loads are considered ultimate load.

Wind Condition and Analysis

Weather conditions in the Chukchi Sea are extremely severe; because of this the wind loads on the structure had to be considered in loads calculations. In comparison to other environmental factors that this structure must withstand, the wind loads are not nearly as high. The wind will cause far less forces on the structure than those that the ice will produce. In order to determine the force of the wind on this structure the design wind speed must be determined. The wind speed that should be used for design was elusive until speaking with a local Professional Engineer who pointed out that the ASCE 7 was the reference of choice when designing for wind loads. ASCE 7 contains a map that shows the design wind velocities for the United States and so for the proposed construction site the wind velocity was 120 mph.

To determine the wind force applied to the structure the America Bureau of Shipping's formula shown in Equation 3 was used (Hsu). In order to use this formula several variables had to be determined, some are calculated from the structure being analyzed and some are from a table that corresponds with this equation.

Equation 3: Wind force on a structure (Hsu).

$$F = 0.00338\ V_k^2\ C_h\ C_s\ A$$

This equation is used to calculate the wind force (F) exerted by wind velocity (V_k) for the given perpendicular area (A) of a structure. C_h is a height coefficient corresponds to a height above the water surface. C_s is a shape coefficient. Both coefficients are listed in Table 1and Table 2, respectively. For this weather station C_h is equal to 1.10 because the structure height is 50 feet above the water. The shape coefficient is not as clear because the definitions don't give weather station as an option. It requires choosing the best option available and a little bit of erring on the side of caution.

Table 1: Height Coefficient, C_h

0 ft	to	50 ft		1.00
50 ft	to	100 ft		1.10
100 ft	to	150 ft		1.20
150 ft	to	200 ft		1.30
200 ft	to	250 ft		1.37
250 ft	to	300 ft		1.43

Table 2: Shape Coefficient, C_s

Cylindrical shapes		0.5
Hull(surface type)		1.0
Deck house		1.0
Isolated structural shapes		1.5
Under-deck areas		1.0
Rig derrick (each face)		1.25

In order to use Equation 3, the cross sectional area of the column and the platform was determined. A very rough estimate was used for the platform since it was not designed completely. The perpendicular area of the column is 300 ft^2 and the platform is 500 ft^2. Lastly, in order to use Equation 3 the velocity had to be converted to knots, which turns the 120 mph to 105 knots. The force produced by the wind on the column is 11 kips and the platform is 19 kips. These two values were calculated separately so that the forces could be applied to the structure at the corresponding locations.

Wave Condition and Analysis

Wave conditions in the Chukchi Sea are very extreme. The most extreme wave conditions are the result of high winds during violent storms. According to a four year study by ConocoPhillips, the most extreme storms can last upwards of 18 hours and produce large waves. The basis for wave forces on the structure is from equations that are functions of wave height, wavelength, and wave period. The determination of these values for design was derived from data provided by ConocoPhillips and from www.globalwavestatisticsonline.com, a website devoted to providing ocean wave statistics. The assumptions used for the purposes of this report are that the data provided in the ConocoPhillips study are representative of

conditions at the structure site, the average storm duration and wave periods provided by the wave statistics website are valid at the site, and that each data point represents a different storm. These assumptions are acceptable because very conservative estimations of design loads were used.

The data provided by Conoco Phillips is in the form of significant wave height, Hs. Hs represents the wave height at which one third of the wave heights in a particular storm will exceed Hs. A graph showing percent exceedance versus significant wave height is provided in Figure 4. This represents an average of the three years of data provided by ConocoPhillips.

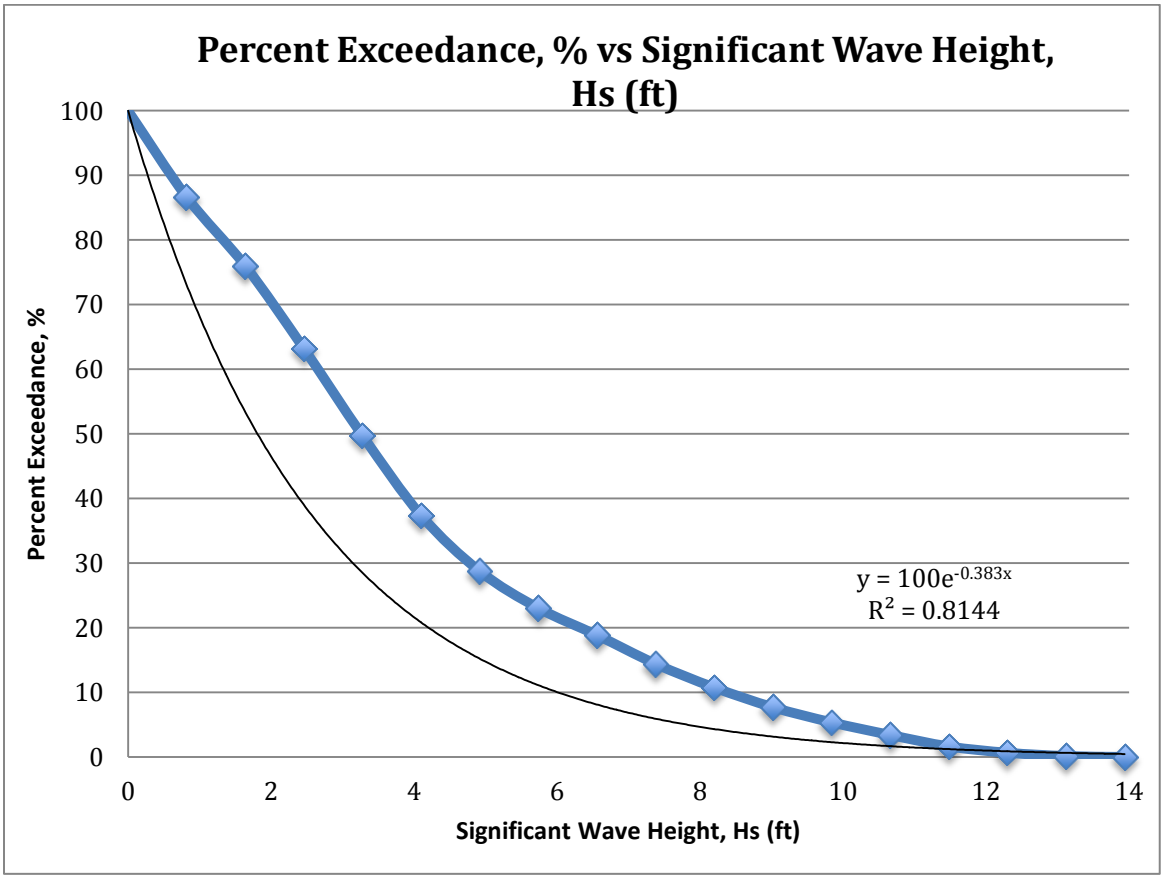

Figure 4: Average Percent Exceedance versus Hs

When beginning analysis, since the design life of the structure is so short, a 5-year return period wave height was sought. The first step was to find the percent exceedance for such a wave. To do this Equation 4 was set to 5 years.

Equation 4: Return period for a wave height and percent exceedance for the wave.

$$R = \frac{D}{8760Pe}$$

Where R is return period in years, D is storm duration in hours, and Pe is percent exceedance. For the purposes of this report an average storm duration of 3 hours was used. After setting R to 5 years, Pe will equal 0.0068%.

Next Pe for the 5-year return period wave was input in to the exponential curve fit equation shown in Figure 4 above. This yielded a significant wave height value of 19 feet. The probable maximum wave height for a storm with a significant height of Hs can be found using Equation 5.

Equation 5: Probable maximum wave height for a storm with a significant height of Hs.

$$Hm = Hs\sqrt{\frac{\ln(3600\frac{D}{T})}{2}}$$

Where T is wave period in seconds. For the purposes of this report, an average wave period of 15 seconds was used. This yielded a probable maximum 5-year return period wave height of 34.5 feet. Because the curve fit equation in Figure 4 has an R^2 value of only 0.8144, a conservative wave height of 40 feet was used for analysis and considered ultimate wave.

The remainder of the analysis was done using the assumed 40 foot maximum wave height. Also a conservative estimate for the period of this wave of 23 seconds was used. Table 3 is a table relating wave height and period for various waves that was used in the spring 2011 report submitted by the class of 2011 .

Table 3: Wave Height and Period

Design Year	1	10	100
Wave height (ft)	28.1	38	44.9
Wave period (sec)	19.2	24.2	27.6

As will be shown, the shorter the period the more force the wave will exert on the structure. The next step in analysis was to determine the wavelength. Wavelength is found using wave period, water depth, deep water wavelength, L_o (Equation 6),

and then using values in the wave table to find shallow water wavelength. When water depth divided by wavelength is less than 0.5, the shallow water wavelength is considered. The wave table is displayed in Appendix A.

Equation 6: Wavelength equation using wave period, water depth.

$$L_0 = \frac{gT^2}{2\pi}$$

Where g is the acceleration due to gravity (9.81 m/s^2). Entering T as 23 seconds, the deep water wavelength was 2709 feet. Using this value and the water depth, 116 feet in the case of the structure, values from the Weigel wave table is used to computer the shallow wavelength. The wavelength was found to be 1344 feet. This value was used for analysis and is considered conservative. Figure 5 displays the cross section of a typical ocean wave.

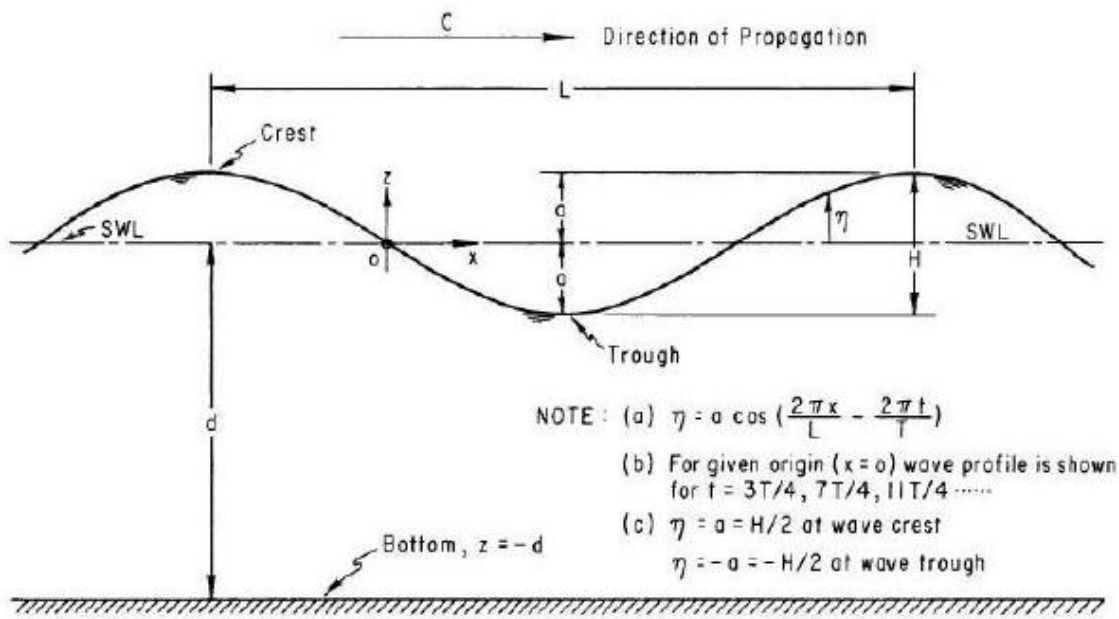

Figure 5: Ocean Wave Cross Section

Using the calculated wave height, depth, wavelength, and wave period, the force of the wave on the structure can be calculated using the Morrison Equation, Equation 7.

Equation 7: Morrison Equation for force of the wave using wave height and depth and wavelength and wave period.

$$F = F_D + F_I$$

Where F_D is drag force and F_I is inertial force. F_D and F_I are represented by Equations 8 and 9 respectively.

Equation 8: Drag force.

$$F_d = 0.5C_d\rho|u||u|$$

Where C_D is the drag coefficient (equal to 0.65 for a cylinder), ρ is the mass density of water, and u is wave velocity.

Equation 9: Inertial force.

$$F_I = C_m\rho\Delta\frac{du}{dt}$$

Where C_m is the coefficient of virtual mass (equal to 2.0 for a cylinder), and $\Delta\frac{du}{dt}$ is wave particle acceleration. u and $\frac{du}{dt}$ are computed using equations 10 and 11 respectively.

Equation 10: Wave velocity is computed using this equation.

$$u = \frac{\pi H}{T}\frac{\cosh k(H+d)}{\sinh kd}cos\theta$$

Where H is wave height, k is wave number $\frac{2\pi}{L}$ where L is wavelength, and d is water depth.

Equation 11: Wave particle acceleration is computed using this equation.

$$\frac{du}{dx} = \frac{2\pi^2 H}{T^2}\frac{\cosh k(H+d)}{\sinh kd}sin\theta$$

For water velocity, the $cos\theta$ function is set to maximum and for wave particle acceleration, $sin\theta$ is set to maximum. After imputing the proper coefficients the Morrison takes to form of Equation 12 which yields force per unit length of a cylinder.

Equation 12: The expanded form of the Morrison equation.

$$F = \frac{1}{2} C_d \rho D |u||u| + \frac{1}{4} C_m \rho \pi D^2 \frac{du}{dt}$$

Where D is the diameter of the structure, ten feet. This equation yields a force of 1.30 kips per linear foot. Based on a 40 foot wave height the total force on the structure is 51.89 kips applied at the datum water level. A calculation page is supplied in Appendix A.

Current Condition and Analysis

Based on information provided by the report by the spring 2011 Chukchi sea group, current conditions in the Chukchi Sea are less extreme than ice and wave forces. Based on this information, for the purpose of this report, only current data provided by a four year ConocoPhillips study was considered and a conservative estimate of design conditions was made. Since the current data available is only in the form of current speed in feet per second, the source of the current was not considered. Other assumptions are that maximum current can occur in any direction but will only occur at one direction at a time, and that maximum current can happen at any time of year. Total current is an effect of general ocean current movements, tidal currents, and current caused by wind. Maximum current measurements tended to correspond to high wind events. There is little tidal activity in the Chukchi Sea with a maximum tidal range of less than one foot. The ocean current movements account for some of the measured current, but wind has the largest effect. With this in mind, it is important to consider maximum current in combination with wave and wind loading. The data obtained and provided by ConocoPhillips was obtained over a period of four years and the analysis was based on average current and maximum currents.

Current is generally greatest near the surface and decreases with depth. Current was measured at a depth just below the surface, approximately 20 feet, a depth of approximately 50 feet, and a depth of approximately 80 feet. The average maximum annual current velocity based on the three years of current data form ConocoPhillips at a depth of 20 feet was 2.25 feet per second, 1.95 feet per second at

50 feet, and 1.69 feet per second at 85 feet. A percent exceedance vs current velocity chart for each depth is displayed in Figure 6.

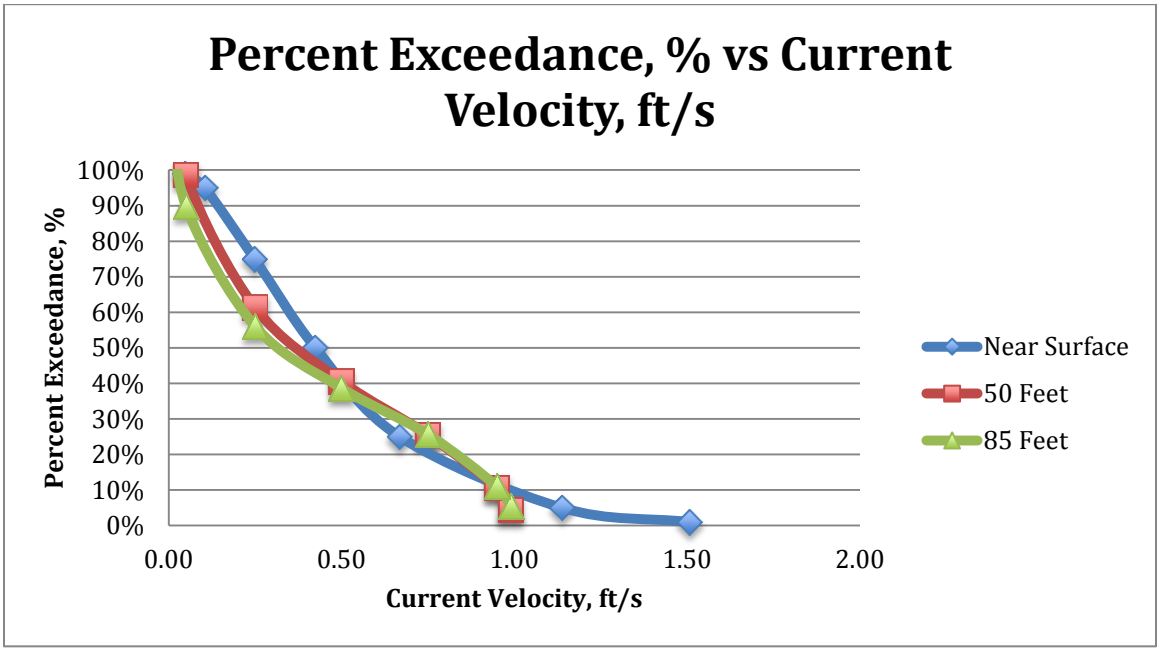

Figure 6: Percent exceedance vs. current velocity chart.

The maximum current speed for each depth from the four year observation period are detailed in Table 4.

Table 4: Maximum Current Speeds.

Depth, ft	Vmax, ft/s
Near surface	2.89
50	2.37
85	1.93

Because the current data is limited to a timeframe of three years, a conservative estimate for ultimate current speed of four feet per second was used for design. For the purposes of this report the four feet per second current speed was considered uniform over the entire submerged structure. Current loading is the drag force caused by water flowing around submerged members. Since the structure was

designed to withstand loading in every directing, all submerged members will be cylindrical. Equation 13 was used to calculate drag force on a cylindrical member.

Equation 13: Drag force for a cylindrical member.

$$F_D = \frac{1}{2} C_D \rho A V^2$$

Where $C_D$is drag coefficient, equal to 0.65 for a cylinder, ρ is mass density of water, A is the area perpendicular to flow, and V is current velocity. The area of the structure perpendicular to flow was calculated based on the length and diameter of each member and the length and diameter of the submerged portion of the column. Based on the area of the submerged structure and a four feet per second current speed, the total force was equal to 22.8 kips centered at the midpoint between the surface and the seafloor on the structure. For the purposes of this report, the current load will not be considered to be distributed to each member because the effect of the load is inconsequential when compared to the ice-crushing load on the structure.

Ice Conditions, Properties, and Analysis

There was insufficient quantitative data available to conduct a statistical analysis of the ice conditions at the site of the structure. The only quantitative data available for analysis were three years of keel ice depth observation provided by a study conducted by ConocoPhilips. Unfortunately, the majority of the force exerted on the structure comes from the crushing load of the consolidated ice layer within an ice ridge. After completing exhaustive research into the relationship between keel ice depth and consolidated ice thickness in an ice ridge, the conclusion was made that no direct relationship has been made between keel ice depth and consolidated ice thickness. Though this conclusion was made, keel ice depth data was valuable in the determination of the design of the submerged portion of the structure.

An ice ridge has three major components: the sail, the consolidated layer, and the keel. The sail can be defined as the portion of the ridge that is above the level sea ice. The consolidated layer is solid ice that is composed of ice blocks, created when

the two level ice sheets collided, that then were refrozen together. Keel ice is composed of blocks of ice that were created when the two level ice sheets collided but did not refreeze together.

In general, the distribution of ice above and below water level is governed by Archimedes' principle which states that weight of the water displaced equal to the weight of the object. In the case of an ice ridge, this equates to the keel depth being between four and five times the sail height. The sail is considered to be unconsolidated rubble ice meaning that the ice blocks composing the sail are only held in place by gravity and friction. Similarly, keel ice consists of rubble ice that is a mix of blocks, air, water, and slush. The unconsolidated keel ice blocks can be idealized as being cubes with side lengths up to more than a meter and down to one centimeter. The ice blocks nearer the surface tend to be larger and become smaller moving vertically downward along the keel.

When a ridge is first formed, it consists completely of ice blocks that have not frozen together. As it is exposed to more freezing days, the blocks begin to freeze together at contact points. Above water this occurs more quickly than below water. Underwater, freezing occurs when the water is warmer that the air above the ice causing heat transfer through the ice and out into the colder air. The heat leaving the keel results in blocks freezing together near the surface. The portion of the keel that refreezes is known as the consolidated layer. The remaining keel by definition is considered completely unconsolidated. This results in the keel having no strength as a structure. Due to the unconsolidated nature of keel ice, the design keel depth ice was approximately 91 feet. The load due to the unconsolidated keel ice was further expanded later in the ice loads portion of this report.

The data provided by ConocoPhilips was obtained using upward pointing sonar and data points were collected when keel depth was greater than 5 meters (16.4 feet). A total of 51963 keels were measured with a maximum keel depth of approximately 87 feet. A count per year versus keel depth chart is provided in Figure 7. The figure shows only keel with depths greater than 45 feet.

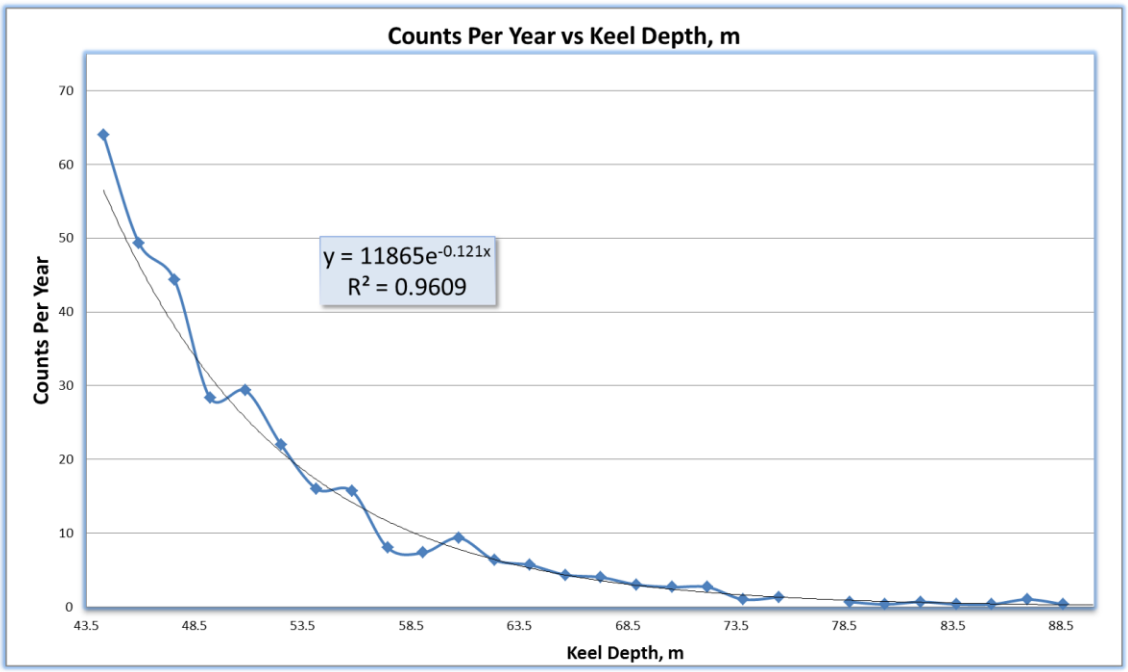

Figure 7: Count per year versus keel depth.

The consolidated ice layer was extremely difficult to determine. Most methods for determining thickness rely on sheet ice thickness and freezing days after the ridge first forms. And using these methods yields a common maximum range of 1.2 to 1.9 times the level ice thickness. For the purposes of this report, the council of experts was sought. The report from the spring of 2011 refers to a consensus thickness and the client, ConocoPhilips, agreed to accept this method for determining thickness. The first estimate came from Kenton Braun, a structural engineer working for PND in Anchorage, Alaska. He estimated that a common rule states that that consolidated ice thickness was twice the level ice thickness. He also gave an estimate of the thickest probable level ice to be 6 feet thick. This gives a consolidated ice thickness of 12 feet. The second estimate came from Dr. Andy Mahoney from the geophysical department at the University of Alaska Fairbanks. He offered the opinion that the thickest probable consolidated layer to be 5 meters or 16.4 feet. Based on this information, a design consolidated ice layer thickness of 15 feet was used in analysis for the purpose of this report.

Forces exerted onto the structure from interaction with sea ice prove to be larger than any others, including forces from wave, current, and wind. Since the ice cover is expected to be 90% in the winter months, ice loads will occur consistently. When the ice interacts with an offshore structure, several loading conditions can occur, including:

- Impact Loading
- Flexural Failure
- Crushing Failure
- Buckling Failure
- Rubble Failure
- Splitting Failure

Impact Loading:

Impact loading (Also called Limit-Momentum Loading) is the load required to stop an ice feature from moving after it has contacted a structure. If an ice floe is small in comparison to the structure, the ice may not penetrate sufficiently to fully contact the width of the structure. The following equations describe the kinetic energy removed from the ice, and the resulting maximum impact force:

Equation 14: The kinetic energy removed from the ice.

$$KE = \frac{(1 + C_m)W_i V_i^2}{2g} = \int_0^{x_m} F_x dx$$

Equation 15: The maximum penetration of the ice.

$$x_m = 0.413(LV_i)^{1.33}\left((1 + C_m)\frac{\rho_i}{p_e}\right)^{0.67}(\frac{1}{R_s})^{0.33}$$

Equation 16: The maximum impact force exerted on the structure.

$$F_{1m} = 1.82h(Lp_e V_i)^{0.67}((1 + C_m)R_s\rho_i)^{0.33}$$

Where:

L = The width of the ice floe.

KE = The kinetic energy of the ice floe.

C_m = The mass factor.

W_i = The ice floe's weight.

g = The gravitational constant.

V_i = The floe's velocity before impact.

F_x = The variable impact force.

x = The length of penetration of ice into the structure.

x_m = The maximum penetration of the ice.

R_s = The radius of the structure.

F_{1m} = The maximum impact force exerted on the structure.

The figure below shows an elevation and a plan view of this failure mode.

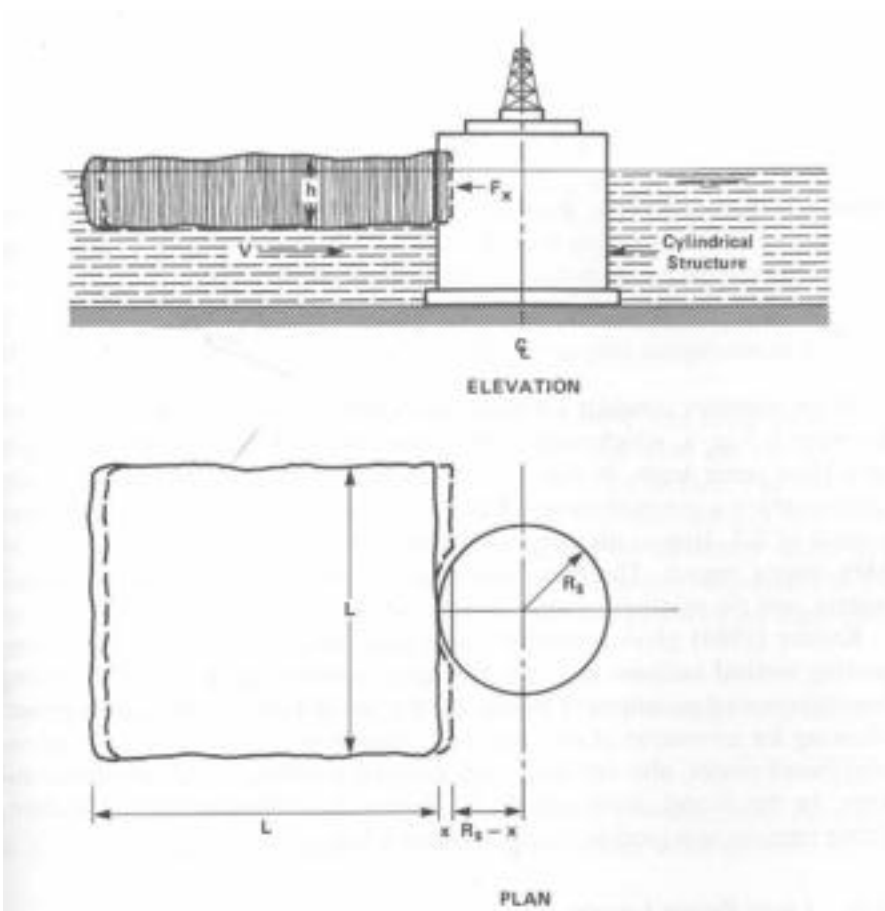

Figure 8: An elevation and a plan view of this failure mode (Muggeridge).

The impact load was considered but was found to be negligible in comparison to flexural and crushing failures. Ice impact is important for areas prove to icebergs,

but less so in areas exposed only to sea ice. A true crushing failure will always exceed the force exerted by impact loading because complete crushing failure occurs when x_m; the maximum penetration is larger than the length of the structure parallel to the velocity of the ice.

Buckling Failure

Buckling failure occurs mainly in early season ice, when the consolidated layer is sufficiently thin. Ice will impact the structure and exert a compressional force. This compressional force will cause the thin ice sheet to buckle and snap. This failure exerts a force on the structure equal to:

Equation 17: Buckling force due to buckling failure.

$$F_b = kl^3(\left(\frac{D}{l}\right) + 3.22\left(1 + \left(\frac{D}{4l}\right)\right))$$

Where:

K= The weight density of water.

l= The characteristic length of the ice sheet.

D = The width of the structure.

E = The elastic modulus of the ice.

The figure below shows a plot of different buckling pressures plotted with respect to D/l. The pressures exerted by this failure mode only happen when the ice is thinner, and are not representative of the maximum loading our structure needs to resist.

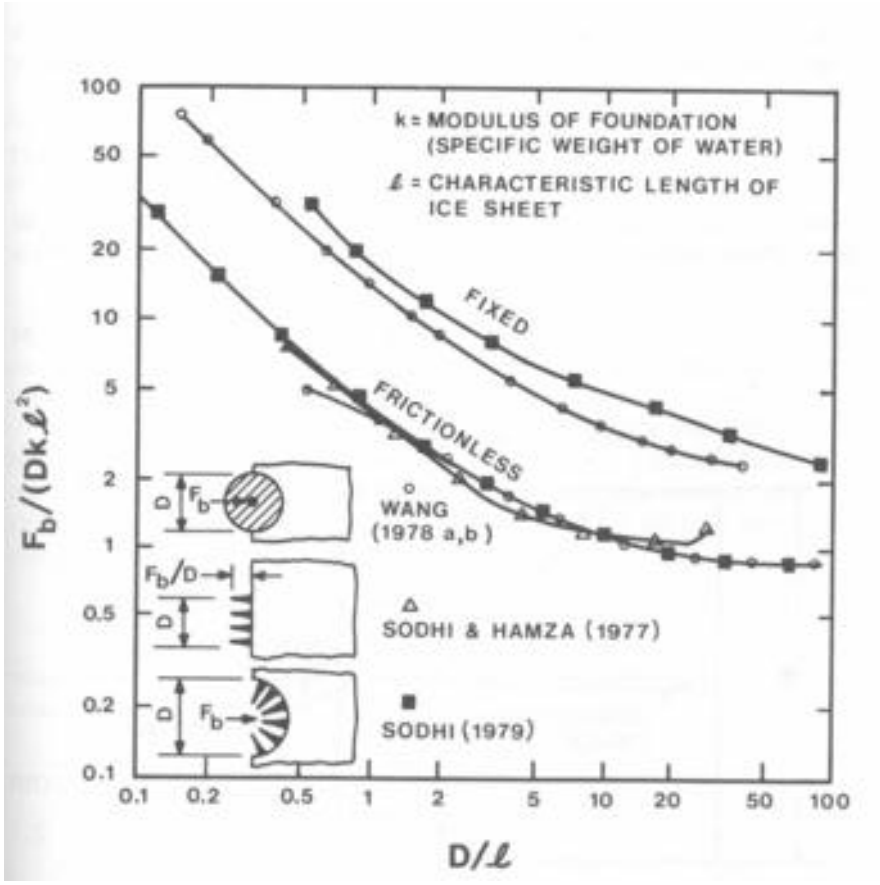

Figure 9: A plot of different buckling pressures plotted with respect to D/l. (Muggeridge).

Splitting Failure

Splitting failure occurs when a large ice floe won't be brought to a stop nor be crushed by a structure. This generally happens when the floe impacts a wedge-shaped structure. In this case, longitudinal or lateral cracking will govern, depending on the dimensions of the floe. For lateral shear cracking, when the ice is long enough, force exerted on the structure is given by:

Equation 18: Force exerted on the structure from lateral shear cracking.

$$F_s = 2\tau_0 Bhtan(\frac{\alpha}{2})$$

Where:

τ_0 = Shearing strength of the ice.

2α = Angle of the wedge structure.

If the floe isn't long enough, a longitudinal crack will form faster than a lateral crack. The force exerted by this mode is given by:

Equation 19: Force exerted on the structure from longitudinal cracking.

$$F_s = 2\tau_0 Lhsin(\alpha)$$

These failures can be seen in detail in the figure below.

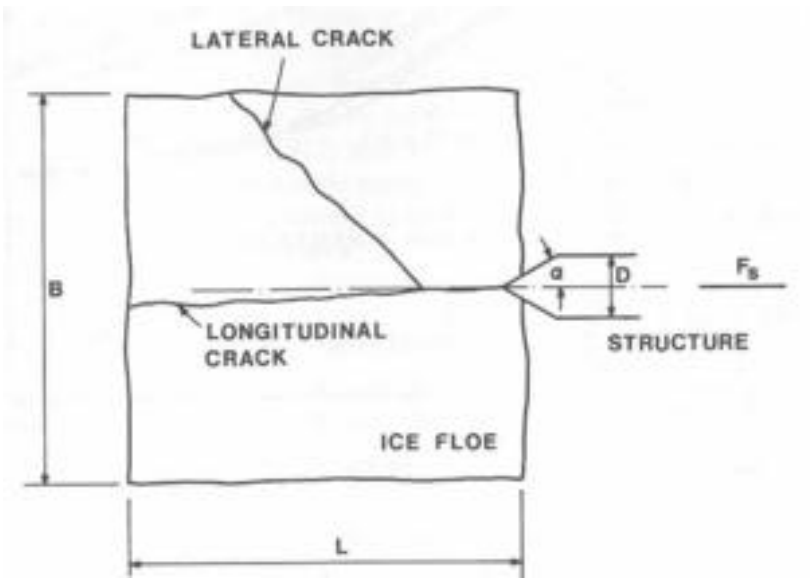

Figure 10: Splitting failure. (Muggeridge).

Since our superstructure contains an inclined protruding "disc" feature with a thin edge, splitting failure may occur. This load will be small compared to crushing and flexural ice loads, however. The force was calculated assuming our ice floe was long enough to fail in lateral cracking, and not too wide to crush instead of split. This load will be applied parallel to the edge of the disc.

Crushing Failure

When an ice floe contacts a structure that is not inclined enough for ice to ride up it, the ice fails in compression. When the ice is too thick to fail in buckling, it will undergo crushing failure. The pressure exerted on the structure is related to the ice feature's compressive strength by several equations. The force on a structure due to ice sheet crushing is:

Equation 20: Force on the structure due to ice sheet crushing.

$$F_c = \rho D h$$

Where:

D = width of the indenting structure.

h = Ice thickness.

ρ = Effective ice pressure.

The following flow chart provided by Conoco Phillips was used to find our effective ice pressure. Calculations were done with a design ice thickness of 4.5m (15 ft).

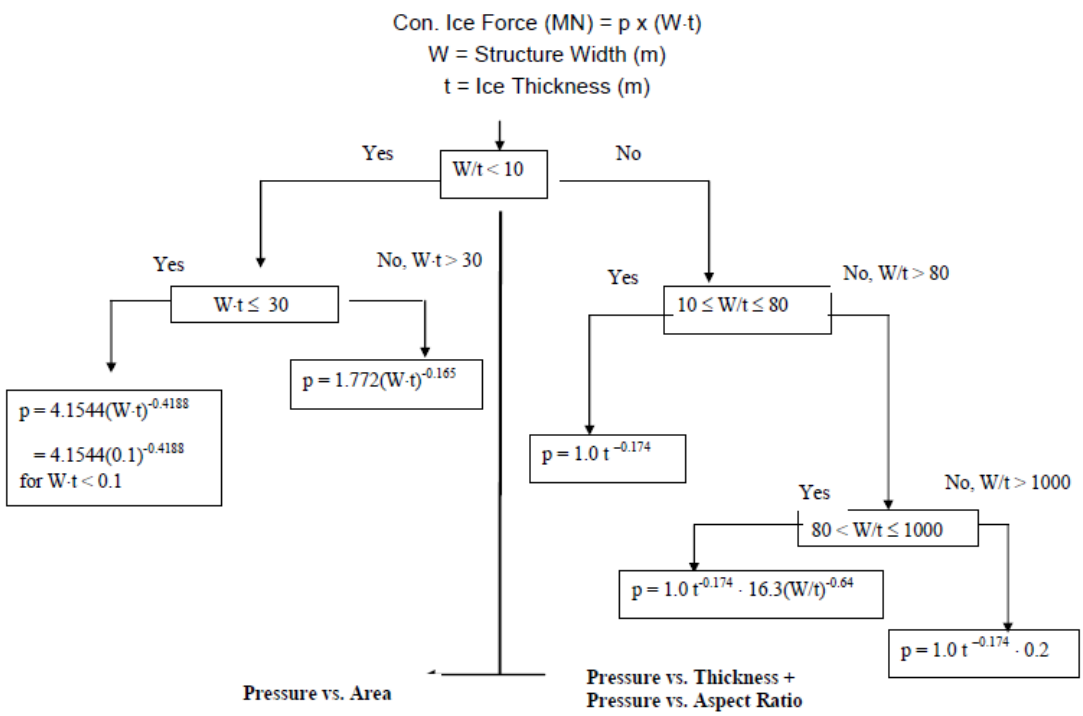

Figure 11: Flow chart describing methodology for determining effective ice pressure. (ConocoPhillips).

Ice failing in crushing exerts the largest force out of all of the possible failure modes. This failure mode will heavily impact our design considerations, and will be the main reason for reducing the surface area of the structure that will be subject to contact by consolidated ice.

Flexural Failure

Flexural failure occurs when a consolidated ice floe contacts a structure at a sufficient vertical angle. Instead of crushing, the consolidated ice will bend, and then break along its height. Two criteria have been established AASTHO to assure that the ice fails in flexural and not compressive. 1st, the angle of the ice travel to the contact area must be greater than 15°. 2nd, the ratio of structure width to ice thickness must be less than or equal to 6.0.

Ice failure in bending exerts two forces, a horizontal and a vertical force, H and V. These were taken as:

Equation 21: Ice failure in bending's horizontal force.

$$H = kf_b h^2 \tan(B + U)$$

Equation 22: Ice failure in bending's vertical force.

$$V = kf_b h^2$$

k = Area coefficient for the contact area (0.8 for half cylinders).

f_b = Bending strength of ice.

h = Ice thickness.

B = Angle of the ice ride-up.

U = Coefficient of friction of ice on structure material.

The inclined disc on our structure is at an angle of 34°, and the design ice load is 15', well within the structure width to ice thickness ratio. It is safe to assume that any ice riding up the disc protrusion will fail in bending. The figure below is a representation of ice-inclined structure interaction.

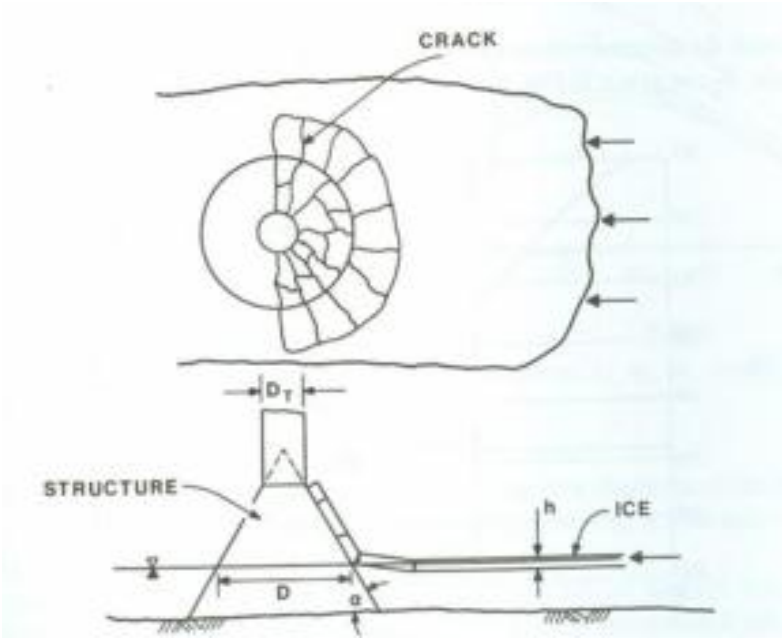

Figure 12: A representation of ice-inclined structure interaction.

Rubble Failure

The other loading cases involve the failure of the consolidated layer of ice. Rubble ice is held together only by buoyancy, gravity, and friction effects. Rubble failure involves the breaking up of the keel and ridge sections of the ice feature. When these sections impact a structure, they exert a much smaller load upon failure. This is because the rubble ice is not fully consolidated, and its voids are filled with slush and water. The top ice rubble forms a ridge, and rubble below the consolidated layer forms a keel. The keel and ridge failures exert the following rubble crushing force (F_{rr}) on a structure:

Equation 23: The rubble crushing force from the keel and ridge failures.

$$F_{rr} = (2BK^2/3)/(\rho_w - \rho_i)g tan\phi$$

Where B is the rubble's width, K is its depth, ρ_w is the density of water, ρ_i is the density of ice, g is the gravitational constant, and ϕ is the friction angle of the rubble ice. The figure below shows an example of an ice feature and its rubble ice contacting a structure.

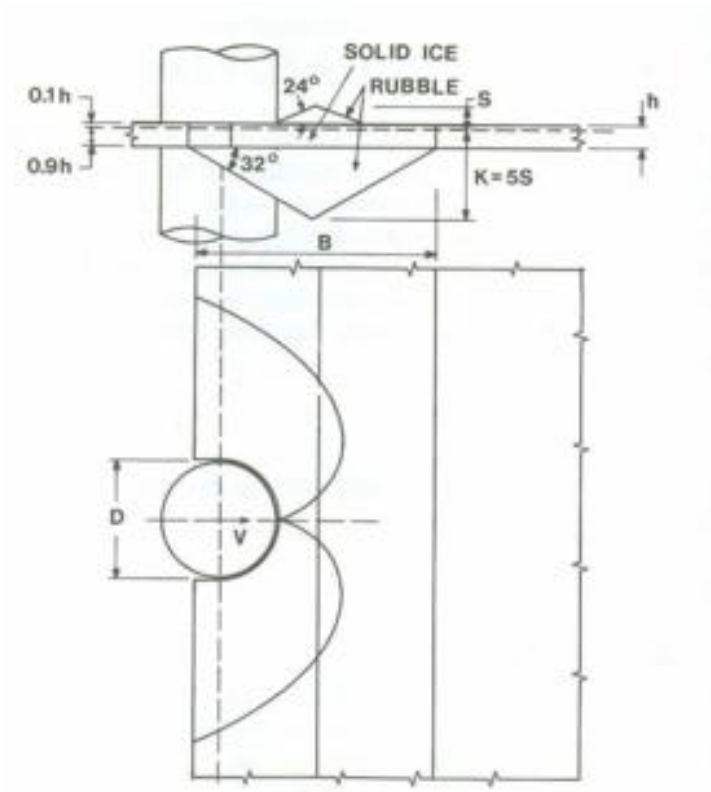

Figure 13: An example of an ice feature and its rubble ice contacting a structure. (Muggeridge).

Keel ice will contact our structure, and the following load will be exerted on it assuming K=40', B=10'.

Structural Design

Platform Layout

The purpose of the platform is to store weather station equipment capable of gathering air quality and weather data continuously over a year's time, while remaining unmanned and using a non-air polluting power source. The platform will need to sit above the maximum wave height and be able to deflect any spray. The platform will be circular in shape, approximately 80' in diameter, and have a wave deflector surrounding the contents. The topside structure will contain the weather station equipment, a power source, and a helipad (see Figure 15).

Weather Station Equipment

The weather station equipment is about 5,000 pounds and resides in a box with dimensions of 18' L x 8' W x 8' H. This box will need to be contained in some sort of shelter with insulation to keep it warm. The power requirement for this equipment is about 4.4 kW.

Remote Power Module

Being that the purpose of the weather station is to gather air quality data, the power source on the platform needs to produce zero emissions for reliable data. Researchers at the University of Alaska Fairbanks (UAF) have designed a" remote power module" in order to power oceanographic equipment in remote areas (see Figure 14). This module includes four wind turbines, a solar array, and a back-up diesel generator. It also allows for five full days of battery charge, produces about 7.5 kWh, and can be configured via satellite. This module has been successfully tested in Barrow, AK which is very close to the same latitude and 200 miles east of the proposed project site.

Figure 14: UAF Remote Power Module during Operation in Barrow, AK (Statscewich, 2011)

The equipment powered by the module is enclosed in an 8'W x 12'L x 10'H shelter that is insulated with R34 insulation (similar to what is used in Antarctica). Temperature controls can be adjusted through a thermostat, and through exhaust fans and diversion loads in and outside the facility. In case of emergencies there is enough room for a person to take shelter. The entire module weighs about 6,000 pounds, and sits on a foundation with dimensions of 16'W x 20'L x 12'H. Although large and heavy, the module can be broken down into 200 pound pieces manageable by two people (Statscewich, 2011).

A similar power source is proposed for powering the weather station equipment as well as required lighting for the platform. Four wind turbines would be included, a backup diesel generator, and multiple solar panels along the south side of the platform. Depending on extra power requirements for extra lighting, etc., more solar panels, wind turbines, or generators can be added.

Helipad

Due to the very small open water season in the Chukchi Sea the only logical access to the platform, other than during the open water season, will have to be by helicopter.

A sixty-foot diameter helipad is necessary for the types of helicopters flown in the area. It will need to be strong enough to resist a 10,000-pound touch down force of the helicopter. The size of the helipad decides the size of the topside structure for the weather station. The helipad will sit above all of the other equipment, which will be enclosed in a cylindrical insulated shelter.

Certain requirements are necessary for a helipad to be placed on the structure. Different types of lighting, windsocks, and safety equipment are needed, as well as an emergency response plan. See "Platform Safety Requirements" for more details.

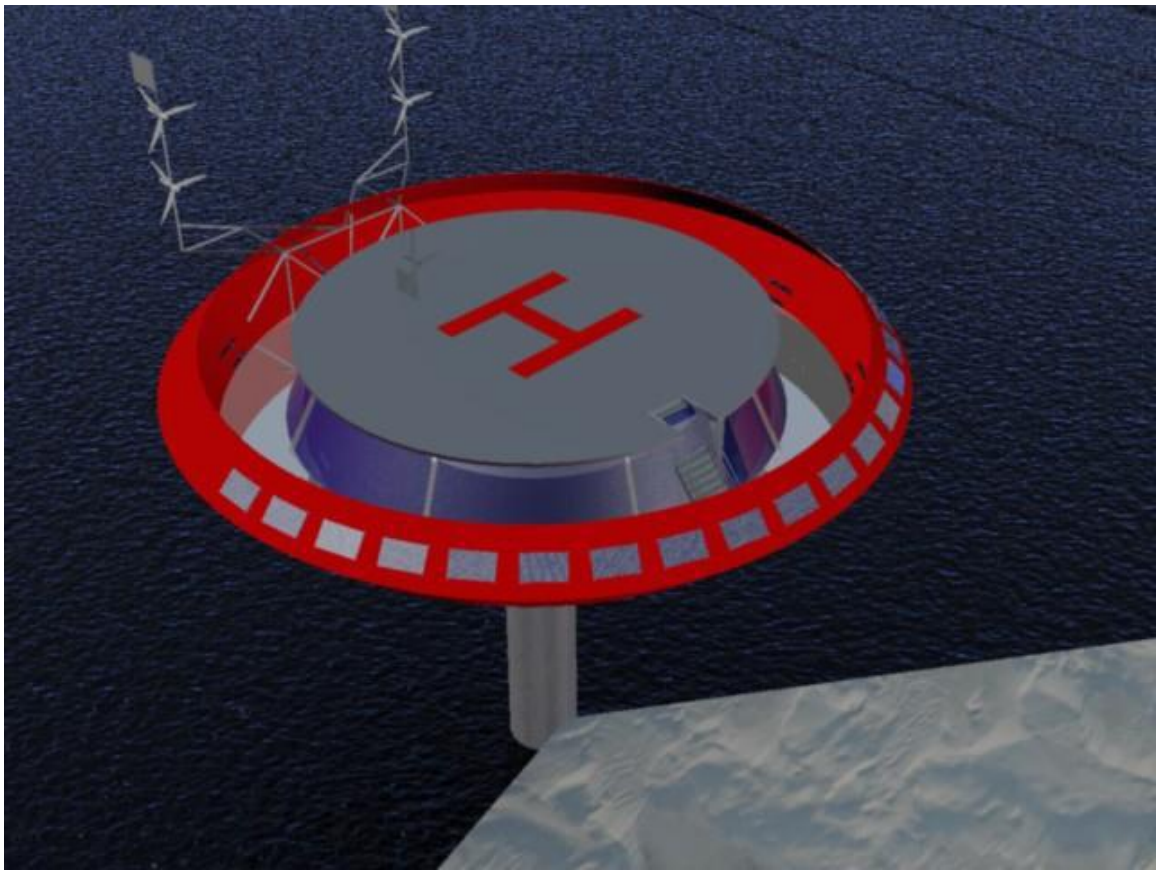

Figure 15: Rendering of Proposed Platform

Platform Safety Requirements

To be compliant with federal standards for safety of personnel and navigation the platform must have certain equipment as required by the FAA and USCG. These

requirements include, but are not limited to obstruction lighting, foghorns, helipad lighting, helipad clearances, handrails, scupper guards, lifesaving equipment and fire extinguishers. The platform would likely be considered an unmanned platform of Class C, but is subject to classification by the District 17 (Alaska) Commander.

Equipment required by the USCG for Aids to Navigation includes obstruction lighting and a foghorn. Vessel traffic is currently very low but may increase significantly in the future so it is prudent to design the structure with all applicable equipment. Four red lights with 360 degree lenses must be installed around the perimeter of the platform 90 degrees apart and be visible to the mariner until they are within 50 feet of the structure, weather permitting. The lights must flash in unison at approximately one flash per second. The lights must operate between sunset and sunrise, although exceptions may be made for this structure by the Commander when the area is ice covered and therefore no vessels would be navigating in the area.

Foghorns are also required on the structure and must emit a 2 second blast every 20 seconds when visibility in any direction is less than 5 miles. The horn must be located between 10 and 150 feet above local mean high water and emit the blast in all directions with a range of 2 miles.

Although the Coast Guard only requires up to 4, type 1 personal flotation devices, the platform will be equipped with more suitable equipment for arctic marine survival. The platform will include a fully enclosed life raft, survival suits, rations, an ePIRB, first aid kit, and spare VHF radios to ensure the safety of the visiting crew in case the platform must be abandoned. Abandoning the structure may be done with a rope from the loading door, or through the access hatch within the equipment room.

Lighting of the helipad is very important to ensure the proper landing procedure and safety for the pilot. Proper design of the helipad would require the use of API RP 2L, as well as FAA Design Guidelines, which were not readily available during the

period this report was written. Design of the helipad configuration was done using common sense and studying existing helipads in similar situations. The lighting on the helipad is set up so that ten 360-degree lights line the perimeter with the 5 lights on the side of the wind turbines being bright red, and the others being white. The helipad would also be illuminated with a spotlight to illuminate the 'H' marking designating the helicopter parking area. Modeling of the platform lighting in AutoCAD showed that this illumination plan would be more than sufficient for a pilot to make a confident landing. Figure 16 shows a rendering of the proposed lighting.

Figure 16: Proposed Lighting Configuration Rendering

Before construction or use of the platform all CFR's should be checked, specifically Title 33, Part 67 and Parts 141-146, as well as FAA regulations.

Superstructure

Introduction

The superstructure comprises of the structure above the bottom truss, and below the platform. The design considerations include minimizing loads, (especially ice loads) maintaining stability, providing relative ease of constructability, and minimizing material cost.

Most ice loads exert an area load on the contacting structure. The best way to minimize the force transferred from this area load is to reduce the structure's surface area where the ice is likely to contact it. To best reduce contact surface area, a single-column design was determined to be the best choice for the superstructure. Because the ice could flow in any direction, a column needed to be designed for the worst directional case. A cylindrical design was decided to be the best choice for its symmetry in all directions.

The platform weighs 840k, and the lateral load exerted on the column by the ice is ~1000-2000k depending on design. The column has a total height of 120' from the substructure truss to the bottom of the platform. The stability of the column restricts the design diameter becoming small. If the column were made too small, it may be inadequate to resist the combined axial and bending loading.

The superstructure should be made as easy to construct as possible. With a diameter of 10', a solid 120' column of normal weight concrete would weigh$1414k$. This would be very hard to pick up if it were only 1 unit. A steel jacket around the entire diameter of the column could remedy this. If the jacket was set in place, and the concrete poured into it, this would dramatically reduce the weight needed to be picked up by a crane. A 2" thick steel jacket will be placed around the structure for this very reason. This jacket will need to be made of corrosion resistant material.

Alternatives

Alternative 1

The first alternative consists of 1 long reinforced column inside a steel jacket, unchanging in diameter. This column would be easy to construct, and would be stable across its entire height. However, ice loading on this alternative would be very high. The contact surface area for the ice would be larger in this alternative than in any other. The ice would fail purely in crushing, the largest ice load. This alternative was not chosen as the final design because of it would lead to large lateral forces, and the largest moment at its base.

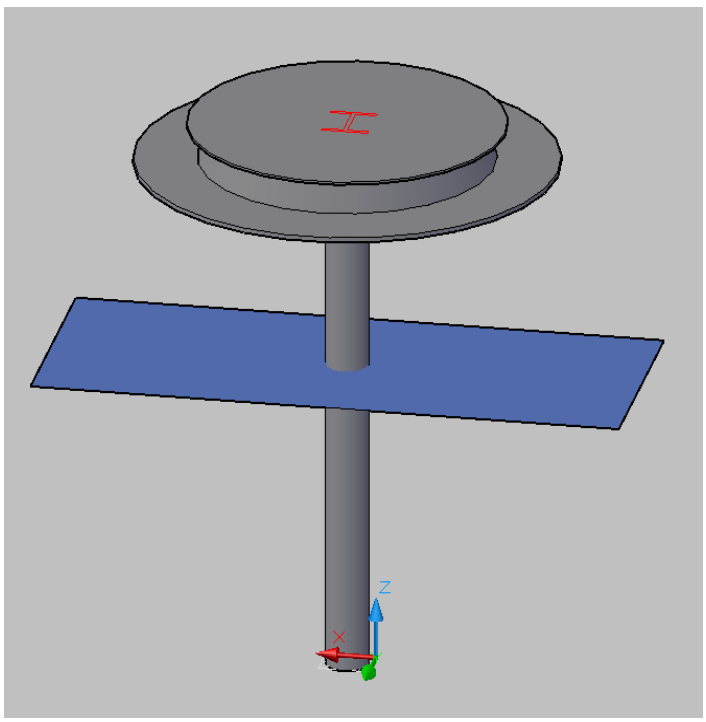

Figure 17: CAD drawing of Alternative 1.

Alternative 2

Alternative 2 has a large column sloping into a smaller column. The larger column at the base would provide sufficient flexural resistance, while the top diameter would be as small as possible to minimize the surface area for ice loading. This design provides everything required. Ease of constructability, the design is not too complicated, weight can be minimized, and stability will be sufficient.

While this design minimizes the surface area ice will contact, the consolidated ice loading will still be 100% crushing. This design was seriously considered, but scrapped in favor of a design that could reduce lateral loads even further by creating a design that would make the ice fail in non-crushing load scenarios.

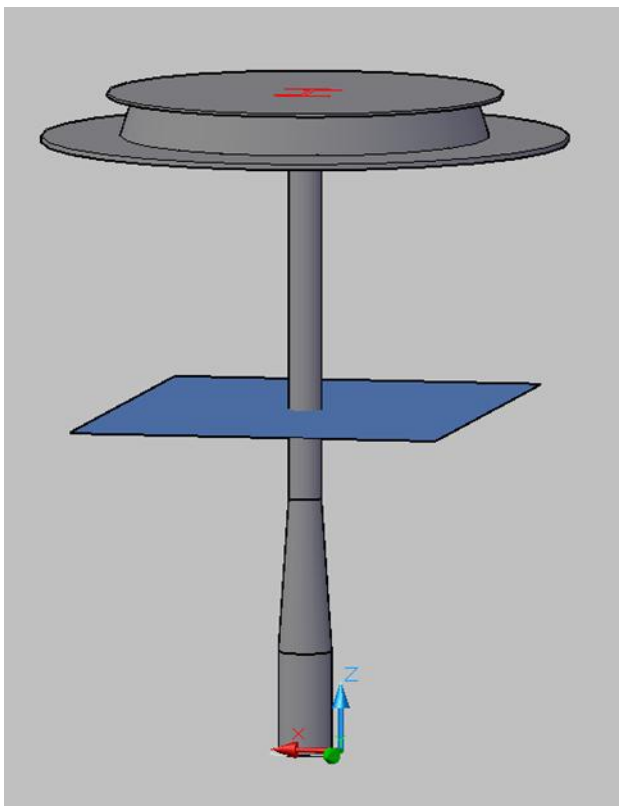

Figure 18: CAD drawing of Alternative 2

Alternative 3

Alternative 3 has a large column on the bottom, a disc protrusion, and a smaller top column. This design provides a 58' lower column, of sufficient diameter to resist the moment and axial loads. The top column will be 58' feet tall, and have a smaller diameter than the bottom column. However, the most important feature of this design is the 4' tall, 12' diameter disc that is also filled with concrete and surrounded by a steel jacket.

This disc will have a twofold purpose. First, it will provide a thin edge for the ice to initially collide with. This will force the ice to undergo crushing failure, and separate into two pieces. Any ice riding below the disc will experience crushing failure on the bottom column. Any ice riding above the disc will fail in bending, a relatively milder loading scenario.

This alternative was eventually accepted as the final design. The reduction in lateral loading provides a much needed reduction in overturning moment in the foundations.

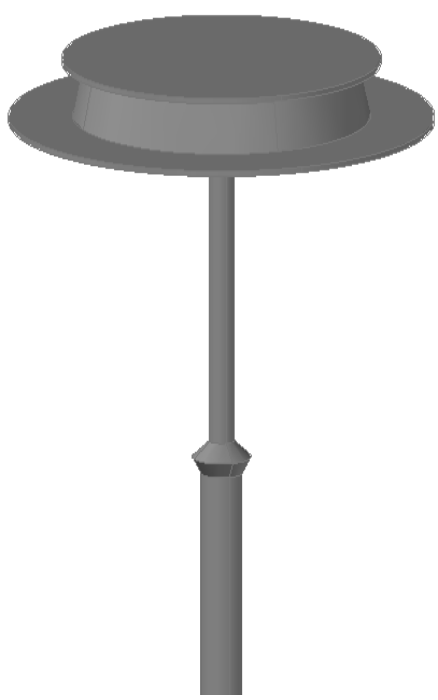

Figure 19: CAD drawing of Alternative 3.

Critical loads on chosen design:

Since wave loading will break up the ice, reducing the ice load, the critical loads ignored wave loading. The combination selected was ice, dead, and wind loading. For the purposes of this report and the loadings conditions data, wind and ice loads are considered ultimate loads. 1.0I+1.0w+1.2D were the chosen load factors using LRFD.

The bottom column has a diameter of 10', while the top column has a diameter of 6'. The consolidated ice layer was determined to be 15', while the keel ice extends 55' below the consolidated layer. 5' of ice will undergo crushing failure on the bottom; 10' will undergo flexural failure on the top, due to the ice breaking disk. This resulted in the following loads:

Crushing load on disc:

$$\rho = \left(\frac{0.145ksi}{mPa}\right)(4.1544(w * t)^{-0.4188}) = 0.37ksi$$

$$F_c = \rho Dh = 0.37ksi * (0.8 * 144\ in) * (1\ in) = 53k$$

Bending failure on top column (10' of consolidated ice)

$$H = kf_b h^2 \tan(B + u) = (0.8)(7200\text{psf})(10')^2 \tan(41°) = 500k$$

$$V = kf_b h^2 \text{v} = (0.8)(7200\text{psf})(10')^2 = 576k$$

Crushing failure on bottom column (5' of consolidated ice)

$$\rho = \left(\frac{0.145ksi}{mPa}\right)(4.1544(w * t)^{-0.4188}) = 0.32ksi$$

$$F_c = \rho Dh = 0.32ksi * (0.8 * 120\ in) * (60\ in) = 530k$$

Keel ice rubble failure:

$$F_{rr} = \frac{\frac{2BK^2}{3}}{(\rho_w - \rho_i) g tan\phi} = (2 * 6' * (55'^2)/3)/(0.8 * 32.2 * tan32)\text{=110k}$$

Platform dead load=840k

Self-weight=$((10'^2)/4)(\pi)(60')(150lb/ft^3) + ((6'^2)/4)(\pi)(60')(150lb/ft^3) = 961k$

Lateral loading

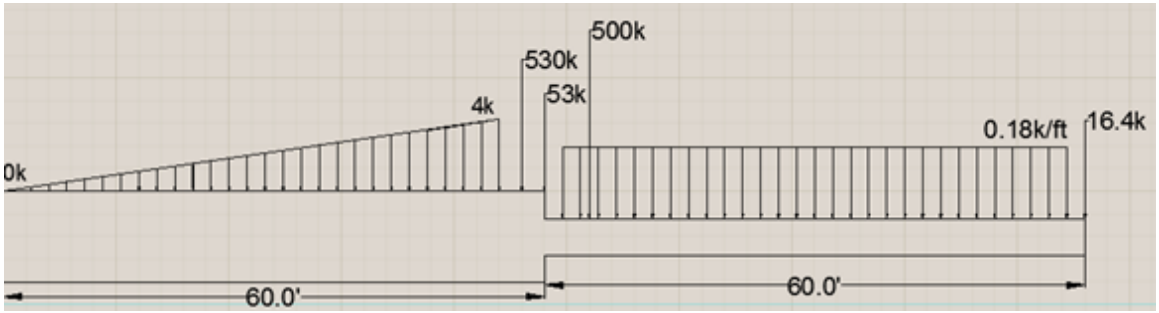

Figure 20: Lateral loading diagram.

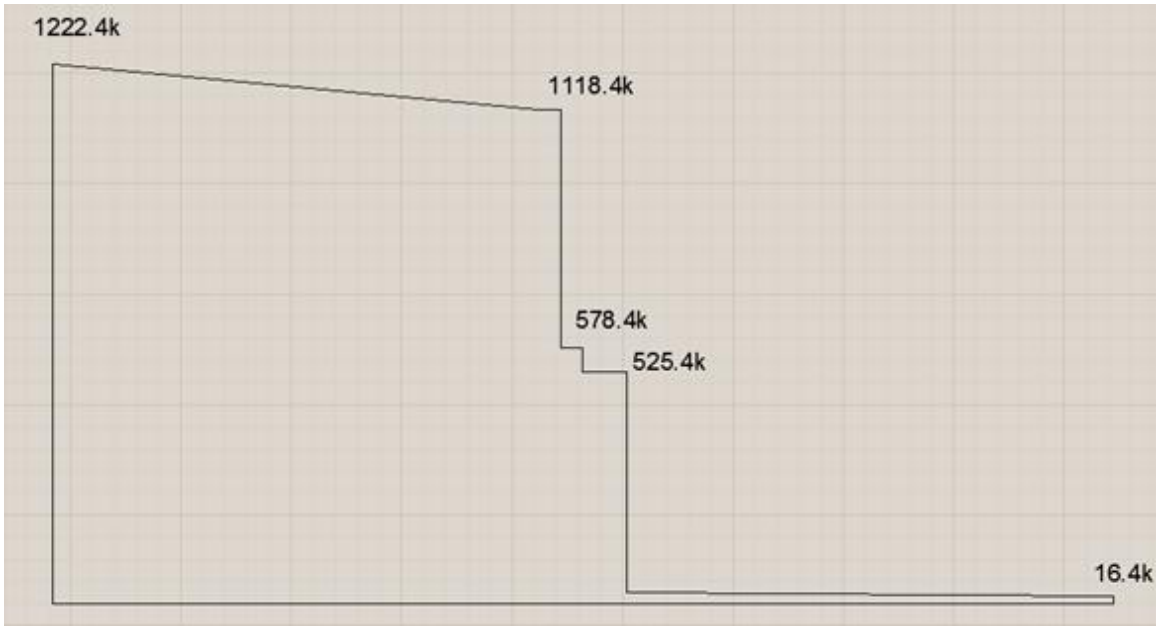

Figure 21: Shear diagram from lateral loading.

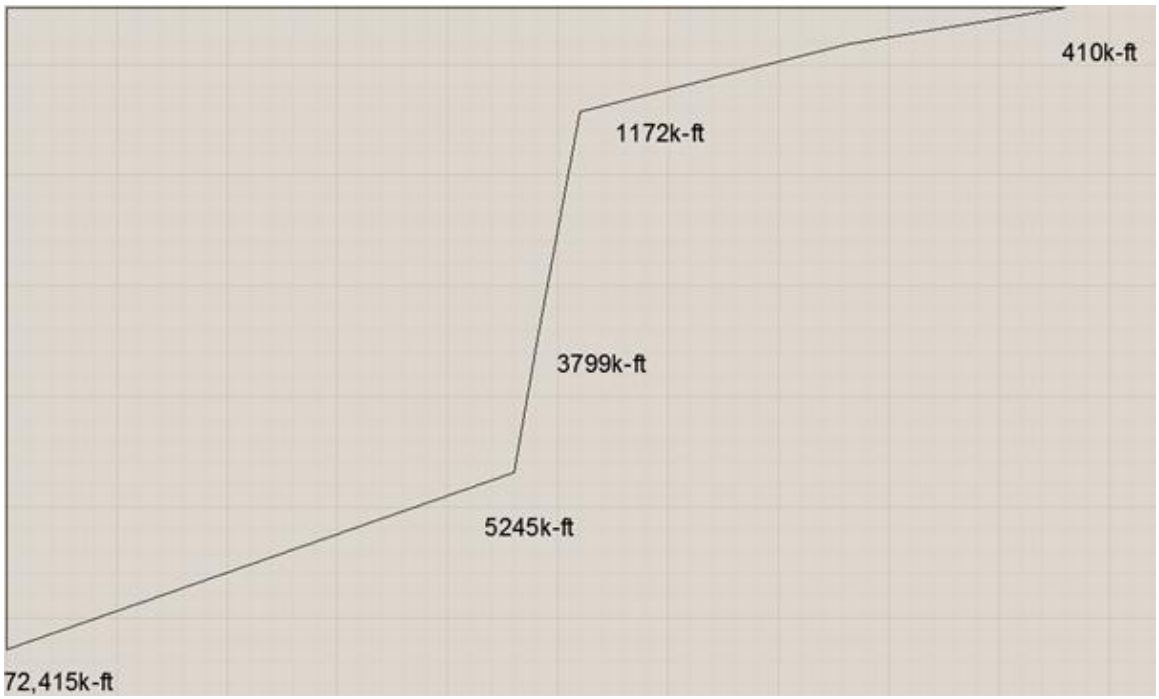

Figure 22: Moment diagram from lateral loading.

Detailing of reinforced concrete column:

The reinforced concrete column was separated into 20' sections, and designed for the maximum moment and axial compression in each section. This was done using the following interaction diagram with the following assumptions where d_b is the diameter of the rebar, and h is the total diameter of the column:

- Steel reinforcement center is at 0.9h (9' for bottom column, 5.4' for top column).
- Concrete strength is 4,000psi, steel strength is 60ksi.
- Center-center spacing of rebar must be greater than or equal to $2d_b$

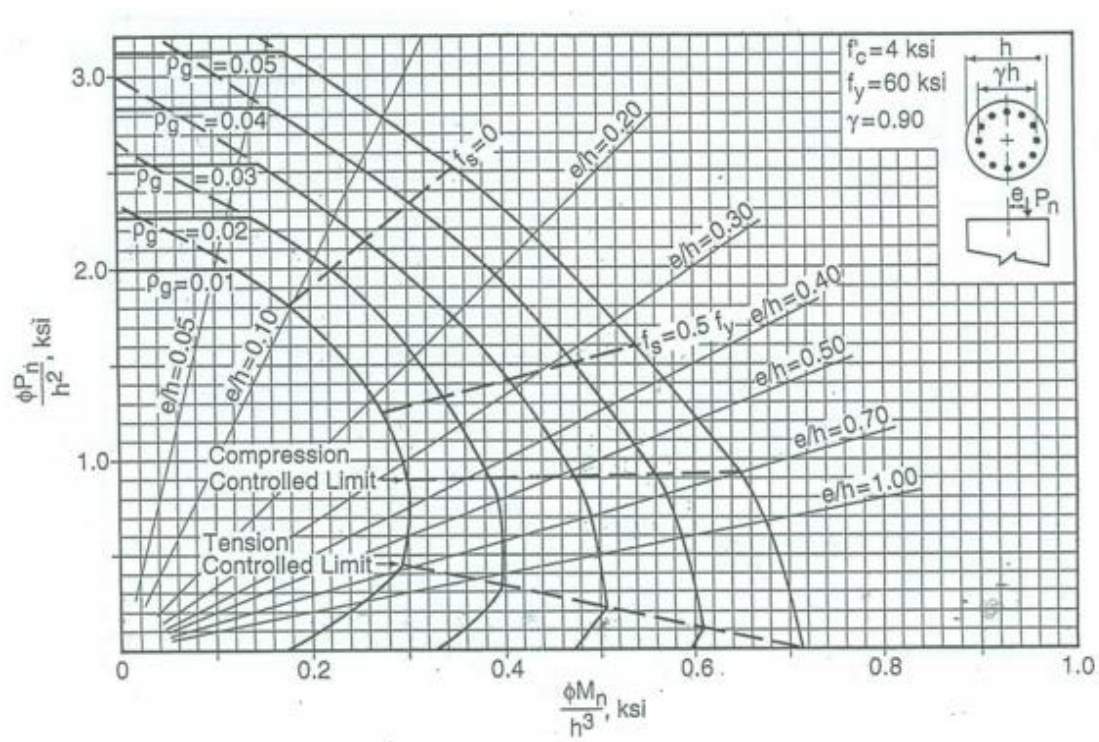

Figure 23: Interaction diagram used to design the reinforced concrete column.

The table below details the rebar selected.

Table 5: Details of the selected rebar.

							Loads								
		diameter		f'c	4	ksi	Ice	Bending	I1	500	k	hor	576	k	vert
	top	6	ft	fy	60	ksi		Crushing	I2	53	k				
	bottom	10	ft	h	120	ft		Crushing	I3	540	k				
				ϕ	0.75			Rubble	I4	4	k				
				γ	0.9										
							Platform		P1	840	k				
	Ag(top)	28.3	ft^2												
	Ag(bottom)	78.5	ft^2	11309.7	in^2		Wind	Platform	W1	16.4	k				
								Column	W2	9	k				

	Mu (k-ft)	Pu (k)	Pu/h^2 (ksi)	Mu/h^3 (ksi)	pg(required)	Ast(ft2)	Bar Size	Bar Area (in^2)	min # Bars	$2d_b$	path length	o.c. spacing (in)	Ld (in)
0-20	72415	1994	0.138	0.503	0.031	2.43	14	2.25	156	3.386	339	2.2	Coupler
20-40	50957	1711	0.119	0.354	0.023	1.81	14	2.25	116	3.386	339	2.9	Coupler
40-60	29499	1428	0.099	0.205	0.011	0.86	14	2.25	56	3.386	339	6.1	Coupler
60-80	5245	1145	0.221	0.169	0.005	0.14	6	0.44	46	1.50	204	4.4	35.25
80-100	791	1044	0.201	0.025	0.005	0.14	6	0.44	46	1.50	204	4.4	35.25
100-120	328	1225	0.236	0.011	0.005	0.14	6	0.44	46	1.50	204	4.4	35.25

The figures below contains plan views of the column sections.

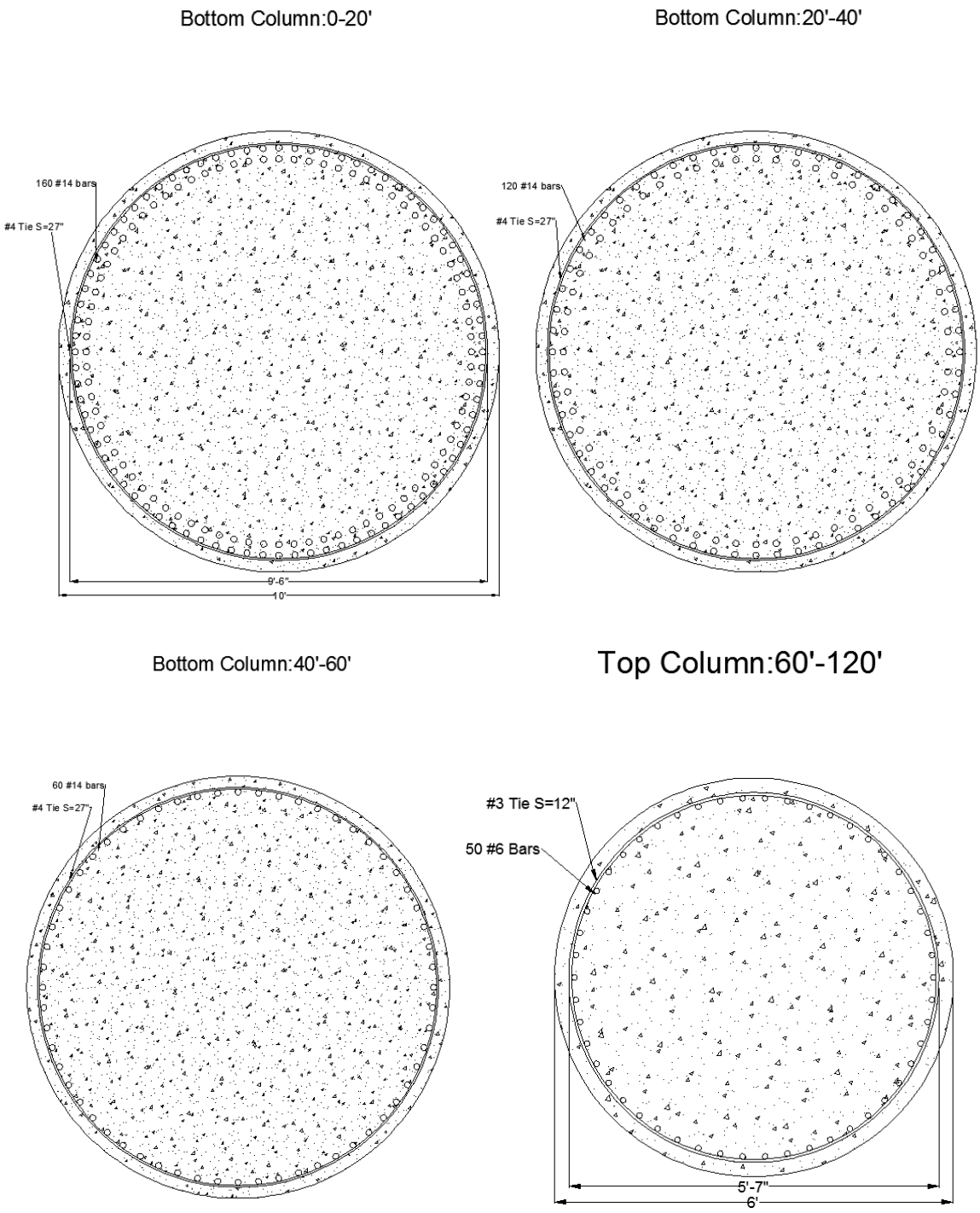

Figure 24: The plan views of the column sections.

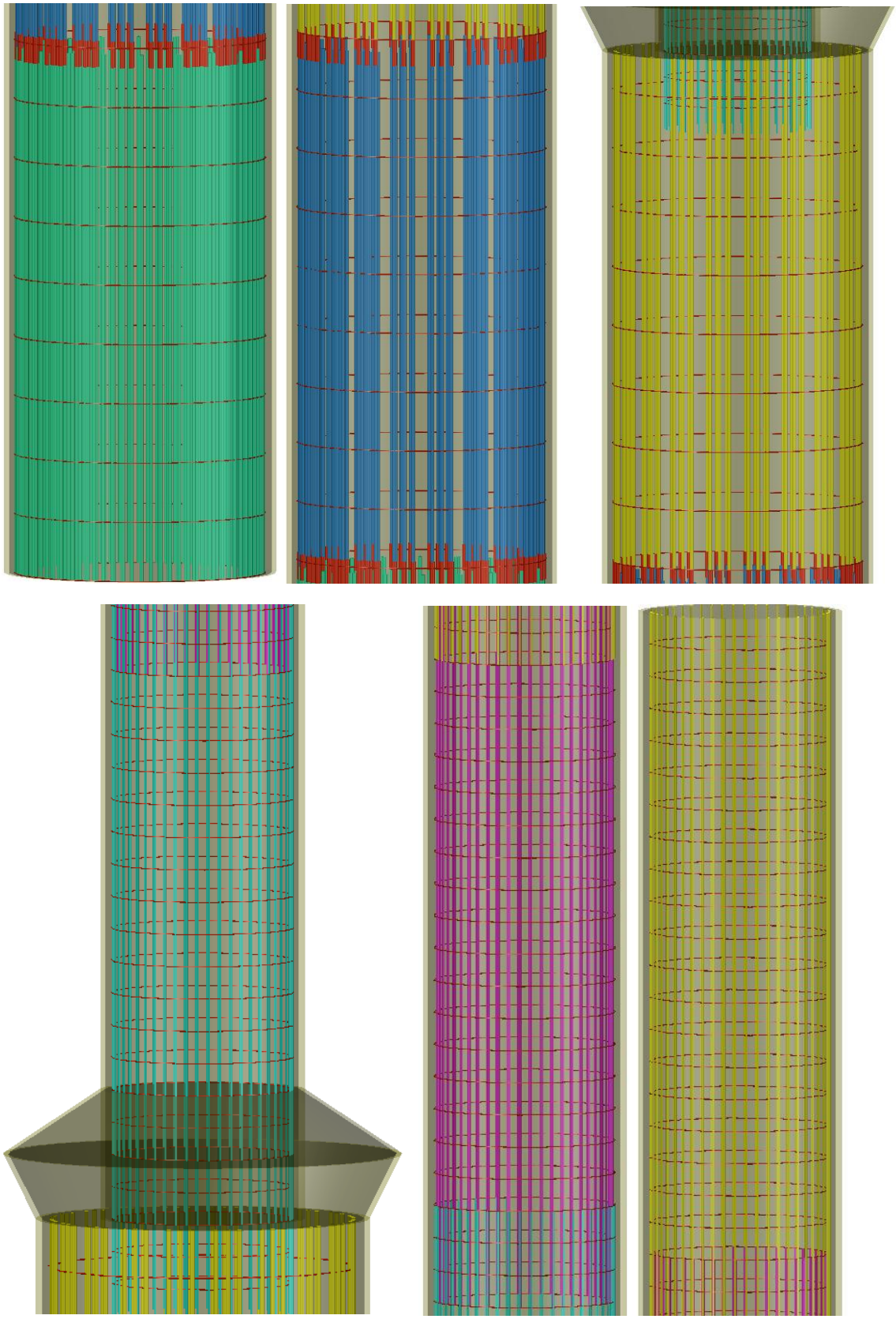

Figure 25: Isometric views of the column reinforcement.

Platform Support

The platform will need to be supported on the edges in order to be within deflection limitations and prevent failure of the platform. Using SAP to analyze the structure it was determined that these supports would not need to be trusses, but would be sufficient as structural pipe. Using the SAP analyses it was found that using four HSS20x.500 members connecting two thirds of the way out of the platform would be sufficient to support the platform and all the loads on it.

Substructure

The structure is subject to several forces including wind, wave, and ice loading. The largest load was the ice load. Therefore, the design was governed by resisting the applied ice loading. This ice load acted at multiple points along the superstructure which causes considerably large forces to be transferred to the substructure truss system and the foundation. These forces could have potentially forced the design to use extremely large members if not properly designed.

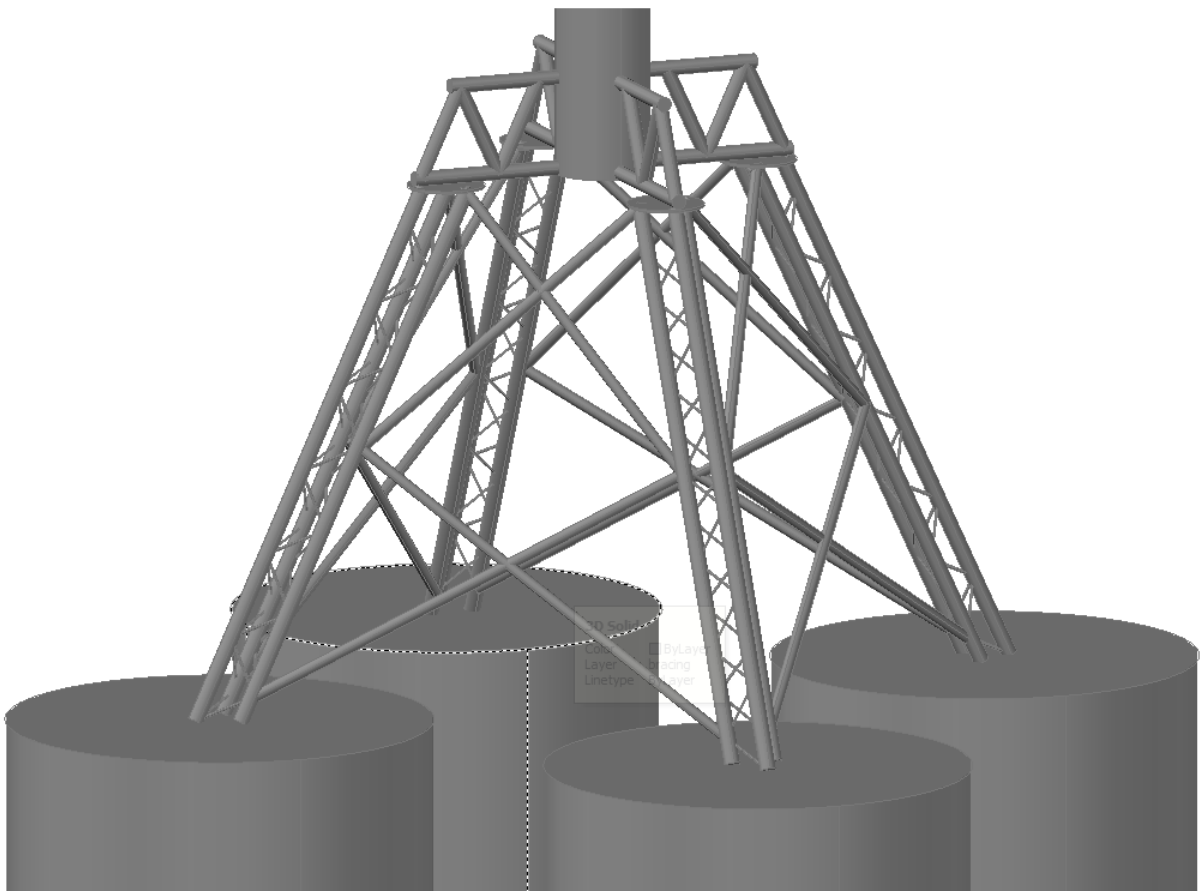

Figure 26: Substructure design concept.

A number of competing design parameters had to be simultaneously optimized in order to create a successful substructure design. The extreme moment that was acting on the connection between the superstructure and the substructure was difficult to support. Due to the station's life span of one year, the design was optimized to prevent overbuilding.

Through the process of design there were three alternatives developed. The first alternative consisted of the trusses being built together and connected ten feet under the cylinder of the superstructure. The connection to the superstructure was designed to be 15 feet above the base of the superstructure. It consisted of more members and had a challenging construction plan that would have been hard to accomplish in the short construction window. There are almost four times as many welds and braces on this design (see Appendix C). Upon structural analysis this alternative was determined to be overbuilt.

The second alternative consisted of the truss members angling to the sea floor at a steeper angle than the other alternative. It had fewer members and less bracing. The design included using high classes of steel that increased the project cost. Upon structural analysis Alternative 2 ended up not being able to support the loads that are expected of the structure. The truss members were at too high of an angle to be able to support the ice load hitting the structure. (See Appendix C).

After some modifications to Alternative 2, the third alternative was developed and determined to be the optimal design for the substructure for the conditions present in the Chukchi Sea. The design consists of four 3D truss legs attached to the suction caissons for the foundation. The three main members of the trusses will be spaced far enough apart to help spread the load to the complete top of the caisson. The braces that are located in between the three large members of the truss will consist of smaller member pieces welded in between them.

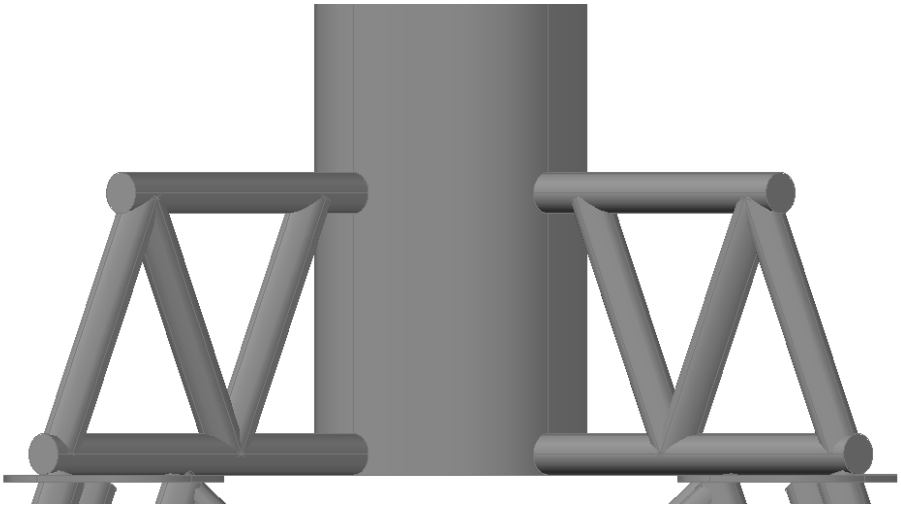

Figure 27: Connection between the superstructure column and the substructure steel trusses.

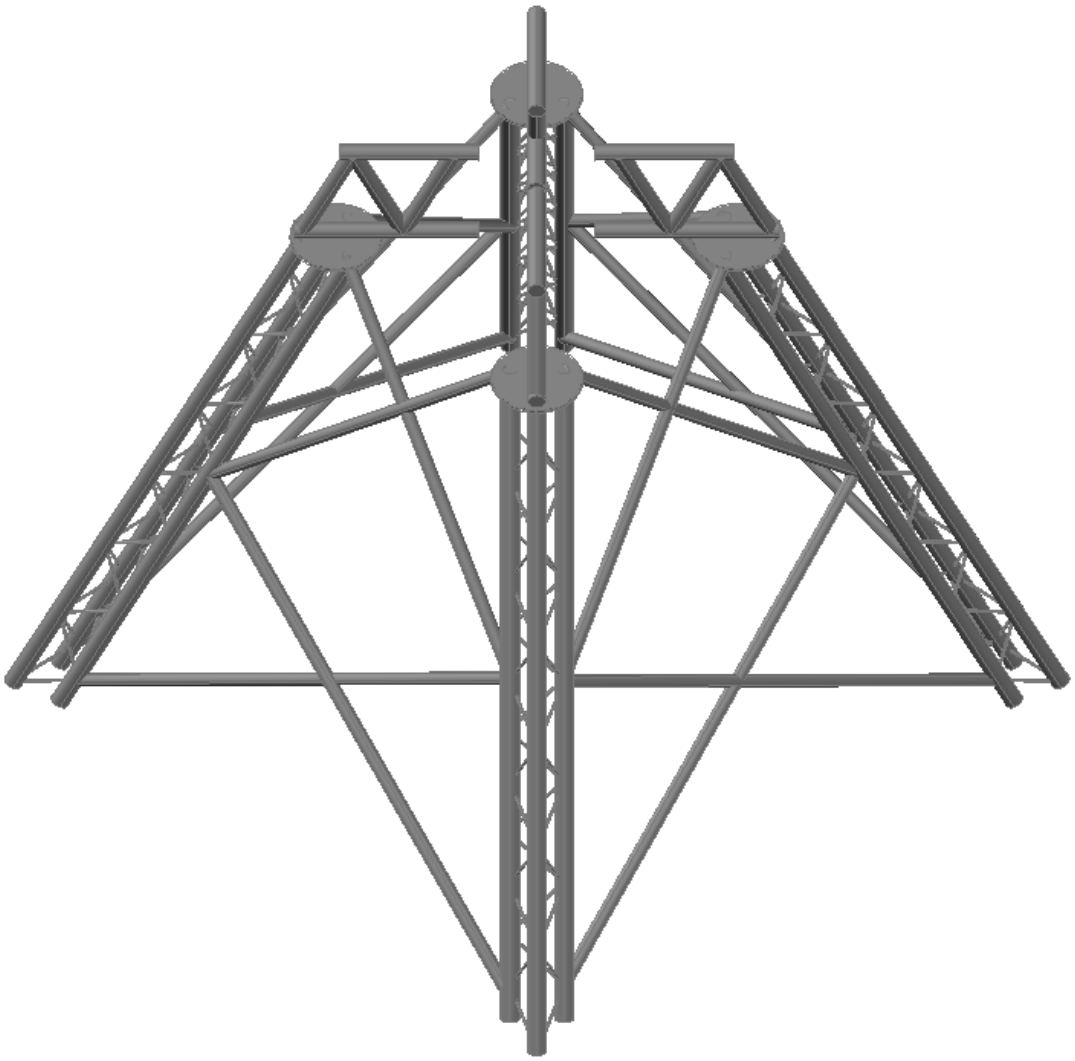

Figure 28: Arrangement of the four steel 3D trusses.

The trusses will connect to the superstructure at multiple locations with welds that support the moment. The trusses will also be welded to the top of the caissons using a full penetration weld. At the caisson connections smaller members will be welded off of the main three members of the truss.

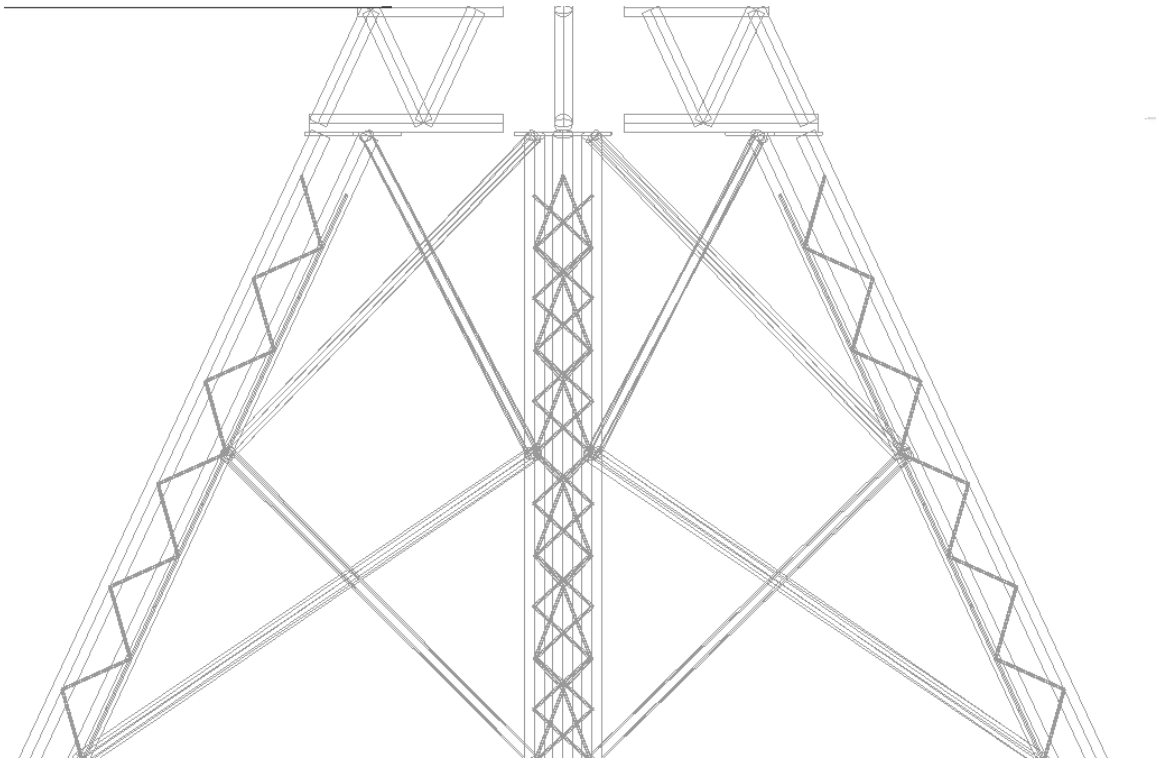

Figure 29: SAP analysis of the substructure trusses and connection trusses between substructure and superstructure.

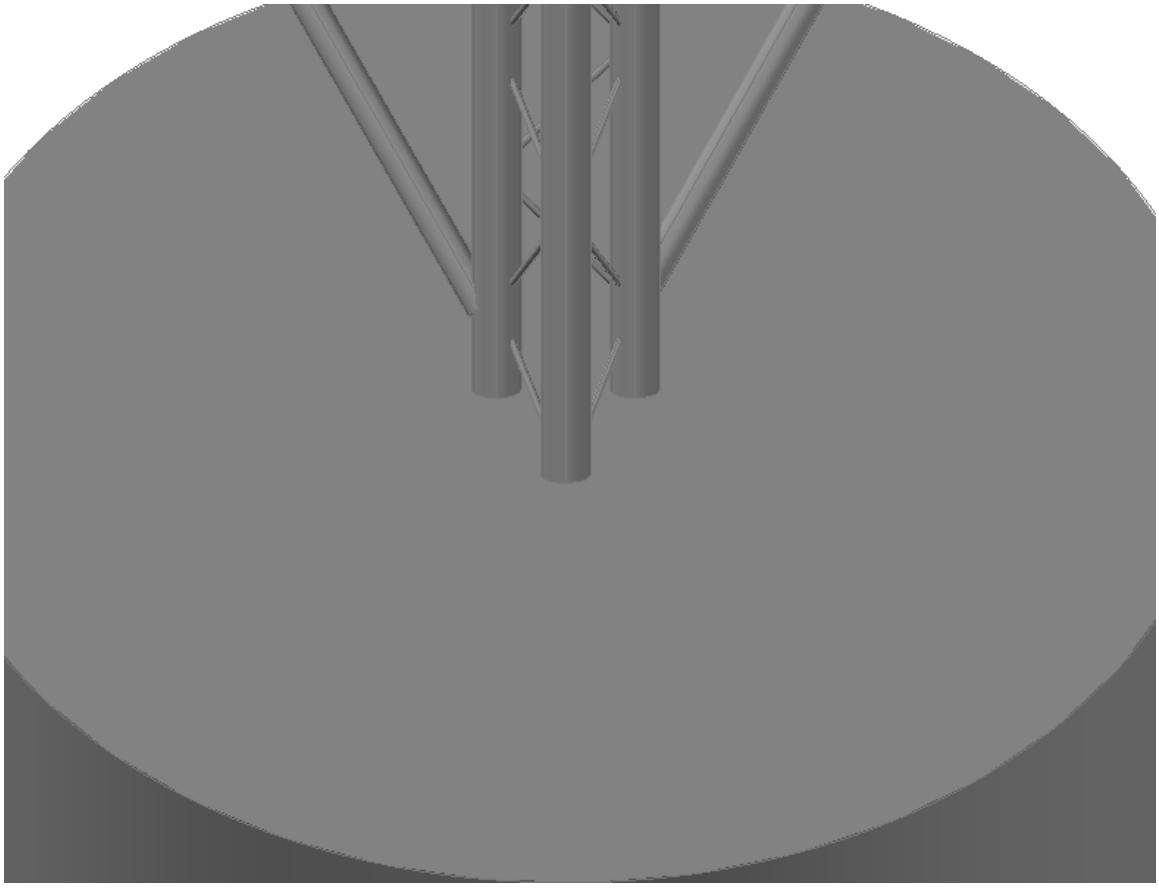

Figure 30: Connection between substructure truss legs and caissons.

Between the four legs of the substructure there will be braces at the bottom. There are five bracing members between the legs on each side of the substructure, for a total of twenty braces. These members form x-bracing that connect: the bottom of each leg to the approximate midpoint of the opposite leg, the midpoint to the top of the opposite leg at the transfer truss, and then straight across to the top of the other leg at the transfer truss and back down. This bracing helps to prevent the legs from buckling and stiffens the entire substructure. The middle height of the trusses will be reinforced by both the diamond form braces and braces that go straight across to the other opposite leg. These braces will support the legs and prevent large deformation.

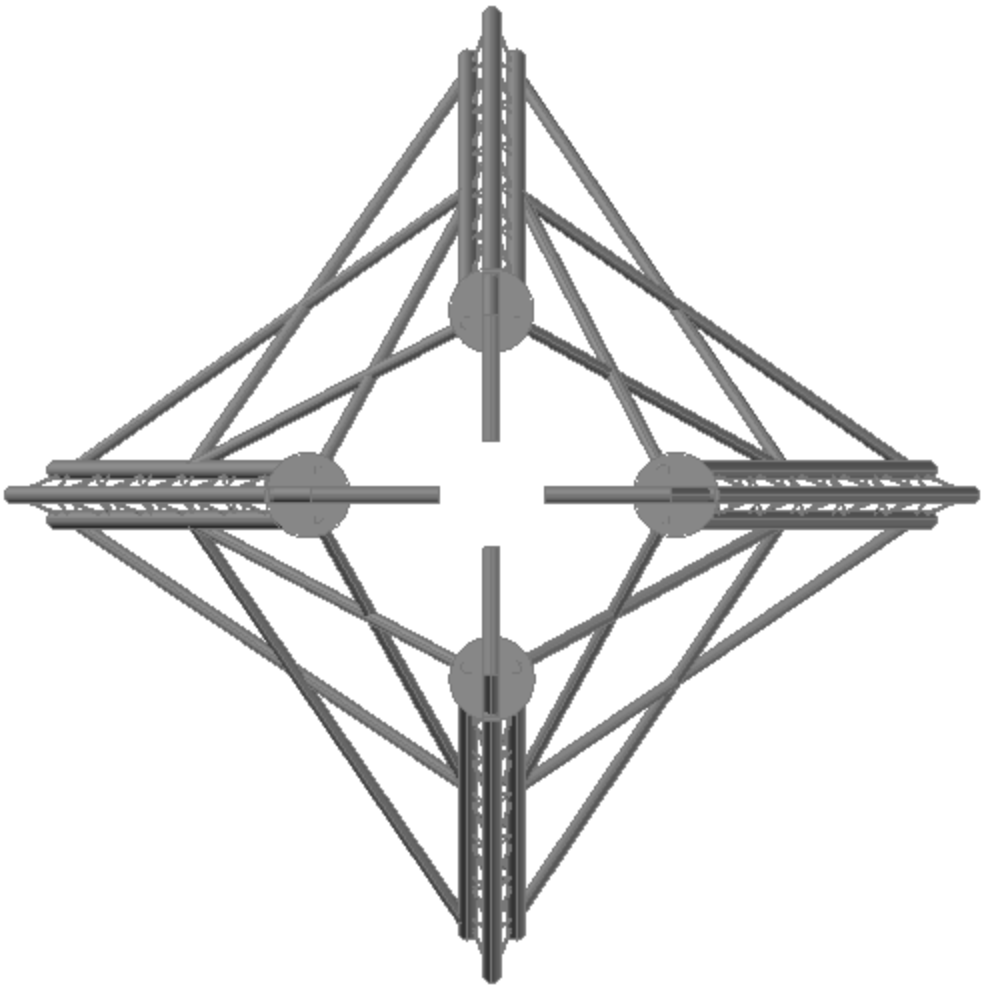

Figure 31: View of substructure truss and bracing configuration.

The method used to determine the forces in this truss system was the computer program SAP2000. Using this program analysis of the truss designs was completed. SAP2000 was used to model suggested designs and determine the internal forces in the members and the deformation. Using SAP2000 the design was altered until it was optimal. SAP2000 also was used to determine the applied forces on the foundation.

Table 6: Table summarizing selected steel members and the properties of those members.

Description	Transfer Truss	Main Leg Members	Leg Web Members	Bracing	Caissons	Total
Shape	HSS18x.375	HSS20x.500	HSS3x.250	HSS14x.312	-	
Weight(lb)	16504	69825	7088	36750	-	130167
Type of Steel	A992fy50	A992fy50	A992fy50	A992fy50	-	
Length(ft)	250	720	1026	864	-	
Cross Sectional Area(in^2)	19.4	28.5	2.03	12.5	-	
Max moment(k-ft)	3760	1303	1000	350	-	
Max shear(k)	1314	815	625	35	-	
Max axial compression(k)	13500	9711	770	5250	-	
Max axial tension(k)	11811	7264	540	5160	-	
Max pullout force(k)	-	-	-	-	24865	
Max bearing force(k)	-	-	-	-	17545	

The trusses will connect to the caisson foundation in a tripod leg fashion to distribute the load across the entire caisson as can be seen in the figure below.

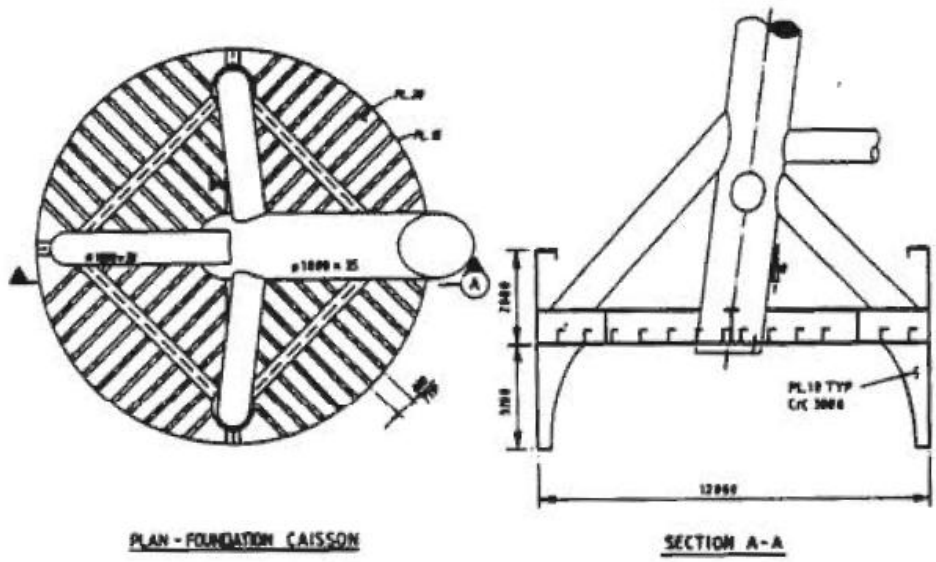

Figure 32: The connection between the caissons and the jacket legs. (Rognlien).

Foundation Design

Soil Analysis

Furgo-McClelland Marine Geosciences, Inc. (FMMG) completed soil investigation on location for Conoco Phillips in 2009. It was found that soil conditions in the area do not vary greatly. The soils are largely cohesive varying from dense silts to dense clays. The soil properties discovered by FMMG are summarized in the following table.

Table 7: The above table summarizes the soil data from the FMMG exploration in 2009. (Furgo-McClelland Marine Geosciences, Inc).

Soil Depth	Description	Effective Unit Weight	Shear Strength	Vertical Stress	Friction Angle	Friction Factor
(m)	-	(kPa)	(kPa)	(kPa)	degree	-
0	medium dense to dense fine silty sand	0	0	0	40.8	0
3.7	very stiff to hard lean clay	9.9	120	36.63	-	0.4
9.1	stiff to very stiff clay	8.5	80	82.53	-	0.5
19.2	dense silty fine sand	7.9	80	162.32	-	0.7

The soil information provided by ConocoPhillips only extends to a depth of 50 feet. More soil data is necessary to truly understand how a foundation will behave as it penetrates the soil. Industry experts recommend that soil exploration be completed on twice the depth of soil that the foundation will penetrate. Before the next level of design is completed additional soil exploration should be done.

Foundation Alternatives

The proposed foundation was a circular configuration of battered piles shown below.

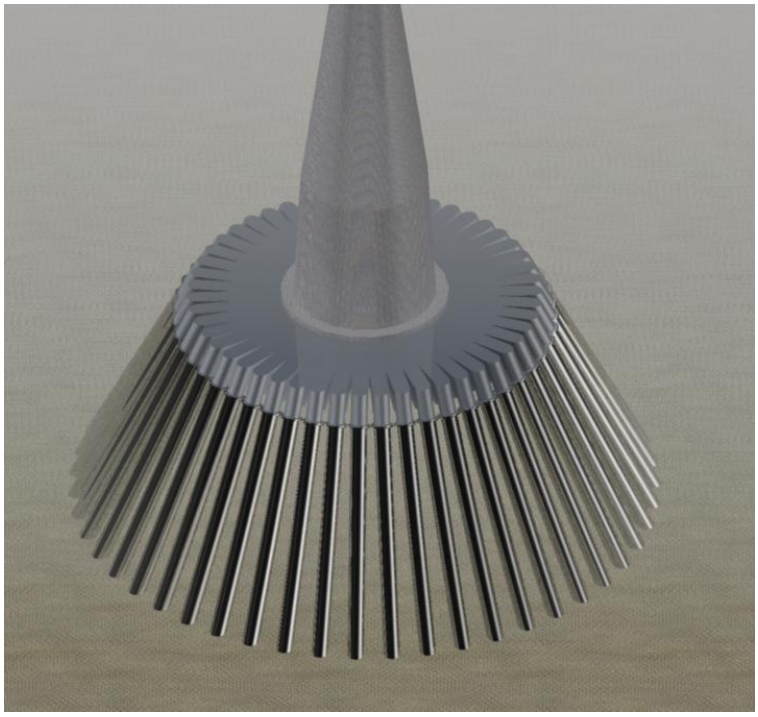

Figure 33: Battered pile configuration was the selected alternative from the UAA Civil Engineering Team in 2011 (Eide, 48).

One of the goals of this project was to investigate the logistics and installation of the project. The team evaluated this foundation type and came to the conclusion that this foundation would support the design loads, but was not economically feasible or practical to construct. The large number of battered piles would be difficult to install in the short construction system. Alternative types of connections were considered with viable alternative being found.

In terms of cost, this alternative was felt to be uneconomical. The driving of this many piles in this type of a configuration is extremely costly. When the remoteness of the location is considered the equipment and expertise needed to drive battered piles at such water depths was not feasible, especially considering that the foundation of the structure may be abandoned following one year of use.

The substructure team evaluated more economical and constructible foundation types. Primarily this consisted of caisson foundations. These foundations are commonly used in offshore structures as a replacement for pile foundations. They have been proven to be economically competitive to pile foundations (Iskander, 1). Two configurations of caissons were considered. The first was a large round concrete foundation onto which the platform would sit. This type of foundation is being used on offshore drilling platforms in the Beaufort Sea (Loset, 4). The caisson is filled with sand and can operate in water depths from 9m to 21m without the addition of a berm resting on the seafloor (Loset, 4).This type of foundation is advantageous because it is mobile, easy to construct, and easy to install. Unfortunately, it is more effective in shallower water because the fill costs are lower and it won't need the addition of a berm resting on the seafloor. It is also more effective on large structures which need more structural support. This configuration will have an increased ice force on it because of the large surface area of the structure at the water level. The large ice force causes additional structural needs.

Figure 34: Molikpaq is an example of a mobile caisson structure in the Beaufort Sea.

The second type of caisson foundation evaluated was a suction caisson, also known as a caisson anchor, skirt foundation, suction pile, or bucket foundation. Geometrically, a suction caisson is larger in diameter and shorting in length than a

traditional pile. The caisson is sealed at the top and looks like an upside down bucket (see Figure 35). It is installed by lowering the caisson or group of caissons to the sea floor slowly so all the caissons touch the seafloor simultaneously. The caissons are then allowed to settle under their own weight with internal water draining through a valve at the caisson's top. Water is then pumped from the caisson using submersible pumps. Pumping water from within the caisson creates a pressure differential which results in a net downward hydrostatic force on the caisson. This force helps the structure overcome the soil's penetration resistance and sink further into the soil. Suction is applied until the caissons have reached their design depth. Any space in the top of the caisson not filled with soil is filled with grout (Iskander).

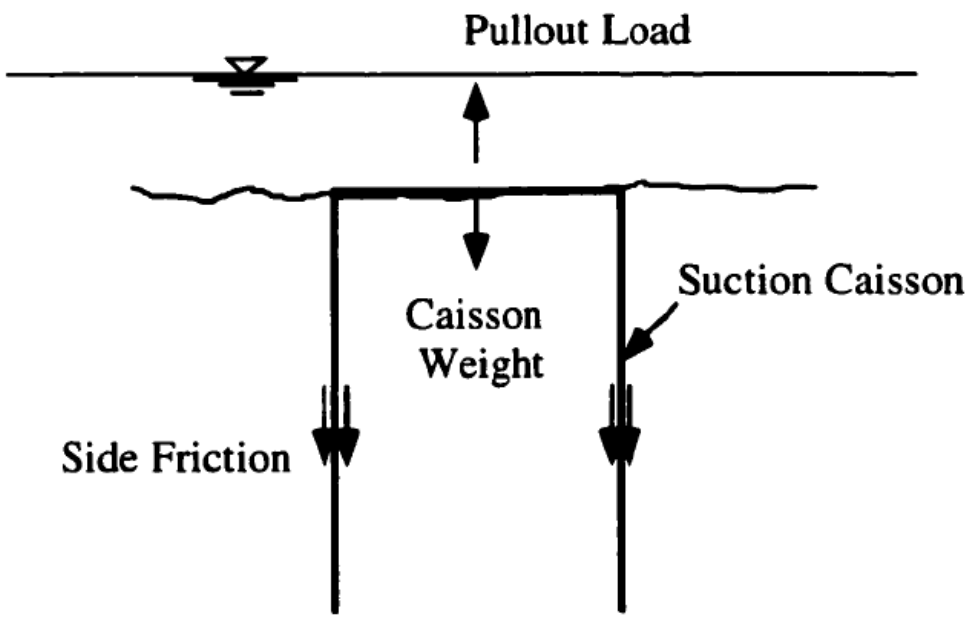

Figure 35: The figure shows a diagram of the caissons resistance to applied loads. (El-Gharbawy, 272)

The suction caisson foundation can be designed as a monopile. A monopile caisson foundation is commonly being used for offshore wind farms.

Figure 36: Monopile suction caisson foundation. (Ibsen).

A monopile foundation is an ideal foundation for wind turbines because they are exposed to large environmental loading (wind) and can withstand the applied moment. They lack redundancy though which could pose problems in the harsh environment of the Chukchi Sea.

Suction caissons have also been used in tetrapod application like the pictured project below.

Figure 37: Statoil's Draupner jacket, the first (1994) with bucket foundations.

NGI did model and field testing for the concept development and provided installation supervision and instrumentation (NGI). The tetrapod configuration has been used in multiple applications since the revolutionary design by Statoil and NGI in 1994. It is commonly used to anchor tension leg platforms in the Gulf of Mexico and offshore fixed oil platforms in the North Sea and on tetrapod offshore wind structures. It is ideal foundation configuration for the Chukchi Sea extreme environmental loads because it offers redundancy.

After evaluating the above alternative, it was decided that the tetrapod suction caisson foundation would be designed. This decision was made after copious research was done on the suction caisson foundation, it's limitations in water depth, limitations of soil type, and overall constructability and cost. It was found that suction caissons have been used in water depths much deeper than the Chukchi Sea included many suction anchor's used in the 3000m deep Gulf of Mexico. They are also a cutting edge foundation design for offshore wind farms. Research was also done do understand the limitations of soil types for effective capacity and

installation. It was found that suction caissons can be used in sands and clays. The top layer of the Chukchi Sea's seabed is sand followed by layers of stiff and hard clays. These soils will allow the caisson to penetrate. Based on the soils strength the achievable depth of penetration can be found. The addition of pumping and ballasts will be needed to reach the desired penetration depth.

Design

Once the foundation alternative was selected, research was completed to understand the capacity of the caissons to withstand lateral, compressive, and tensile forces. The caisson capacity can be summarized by the following figure's free body diagram (FBD).

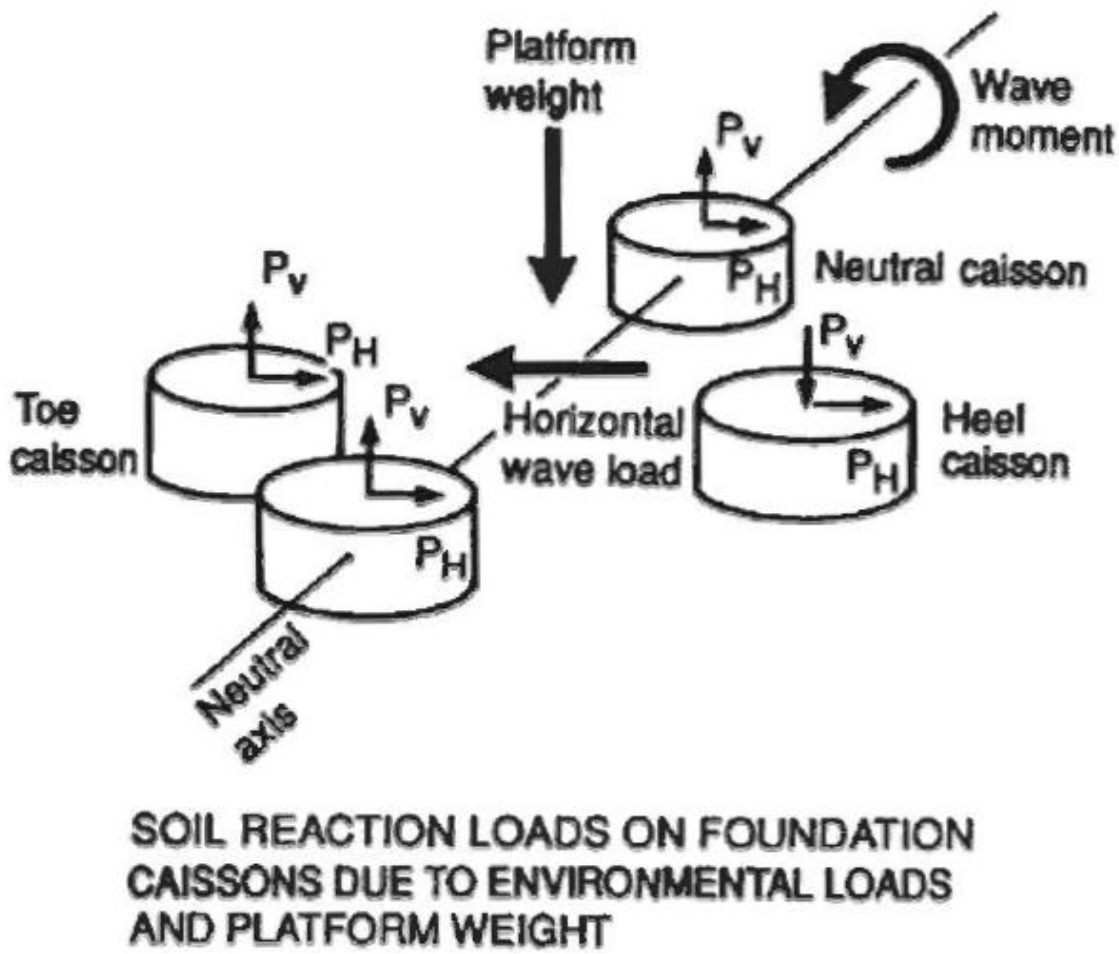

Figure 38: Soil loads on the foundation due to environmental loads like ice. (Rognlien).

From this figure, it can be understood that in the design loading case one caisson will be in tension while the other will be in compression and two of the caissons to be neutral. The applied loading includes the structures dead load, a lateral environmental load such as ice, and the applied current or wave loading. From this the required capacity of the caissons can be designed.

The tensile capacity of caisson in sand is given by the following equation.

Equation 24: Tensile capacity of a caisson in sand (Byrne and Houlsby, Sand).

$$V' = \underbrace{\frac{\gamma' h^2}{2}(K\tan\delta)_o(\pi D_o)}_{\text{friction on outside}} + \underbrace{\frac{\gamma' h^2}{2}(K\tan\delta)_i(\pi D_i)}_{\text{friction on inside}}$$

We consider only the frictional effects to be conservative and ignore the capacity provided by the end bearing annulus. In this equation the variables are defined as:

V': tensile capacity

γ': effective soil unit weight

δ: fiction angle

K: lateral earth pressure coefficient

D_o: outside diameter

D_i: inside diameter

h: height of soil

The tensile capacity of the caisson in clay is given by the following equation:

Equation 25: The tensile capacity of a caisson in clay. (Bryne, clay).

$$V_o = 2.7\pi d^2\left(1 + 0.4\left(\frac{L}{d}\right)\right)s_u$$

We consider the effects of the shape of the caisson, its ratio between length and diameter and the shear capacity of the clay. In this equation the variable are defined as:

d: average diameter

s_u: shear strength

L: length of the caisson

V_o: tensile capacity in clay

The compressive capacity of the caisson in sand is given by the following equation:

Equation 26: Compressive capacity of a caisson in sand (Byrne and Houlsby, Sand).

$$V' = \underbrace{\frac{\gamma' h^2}{2}(K \tan\delta)_o(\pi D_o)}_{\text{friction on outside}} + \underbrace{\frac{\gamma' h^2}{2}(K \tan\delta)_i(\pi D_i)}_{\text{friction on inside}}$$

The same equation as used for tensile capacity is used for compressive capacity in sand for the capacity considered comes from the frictional effects. In this equation the variables are defined as:

V': compressive capacity in sand

γ': effective soil unit weight

δ: fiction angle

K: lateral earth pressure coefficient

D_o: outside diameter

D_i: inside diameter

h: height of soil

The compressive capacity of the caisson in clay is given by the following equation:

Equation 27: Bearing capacity plus fictional capacity of the caisson in sand. (Byrne, clay).

$$V' = \underbrace{h\alpha_o s_{u1}(\pi D_o)}_{\text{adhesion on outside}} + \underbrace{h\alpha_i s_{u1}(\pi D_i)}_{\text{adhesion on inside}}$$

$$+ \underbrace{(\gamma' h N_q + s_{u2} N_c)(\pi D t)}_{\text{end bearing on annulus}}$$

This equation combines the frictional effects of adhesion of the clay on the outside of the caisson with the bearing capacity of the annulus of the caisson for the total compressive capacity in clay. The variables in the above equation are defined as:

S_u: shear strength with the numbers denoting the layers.

α: friction factor with the numbers denoting inside and outside

γ': effective soil unit weight

h: height of soil layer

N_q: bearing capacity factor for loading

N_c: bearing capacity factor for cohesion

D_o: outside diameter

D_i: inside diameter

D: average diameter

The caisson capacity for lateral loading in sand is given by the following equation:

Equation 28: Passive pressure of a horizontal retaining wall. (Das).

$$\tfrac{1}{2} * \gamma' * z^2 * \pi d(1-\sin(\Phi))$$

This equation utilizes the passive pressure because the soil is granular. Where the variables in the above equation are defined as:

γ': effective soil unit weight

Φ: friction angle

d: diameter

z: depth below surface

In clays the caisson's lateral capacity is defined as:

Equation 29: Lateral capacity in clays (Byrne, clay)

$$H_D = N_h L d s_u$$

This equation uses the lateral capacity factor and the shape of the caisson in combination with the shear capacity of the clay to understand the capacity to resist lateral loading. The variables are defined as:

H_D: lateral capacity

N_h: lateral capacity factor

S_u: shear strength

L: length of the caisson

d: diameter of the caisson

The previous equations for the capacity of the caissons to resist various types of loading and the knowledge of the applied loads lead to the design dimensions of the caisson. A factor of safety of 1.5 was applied to the calculated ultimate loads to convert the ultimate loads to allowable. The American Petroleum Institute prescribes this factor for fixed offshore structures foundations (API).

Caisson's capacities at various diameters spanning soil depth in feet are shown below.

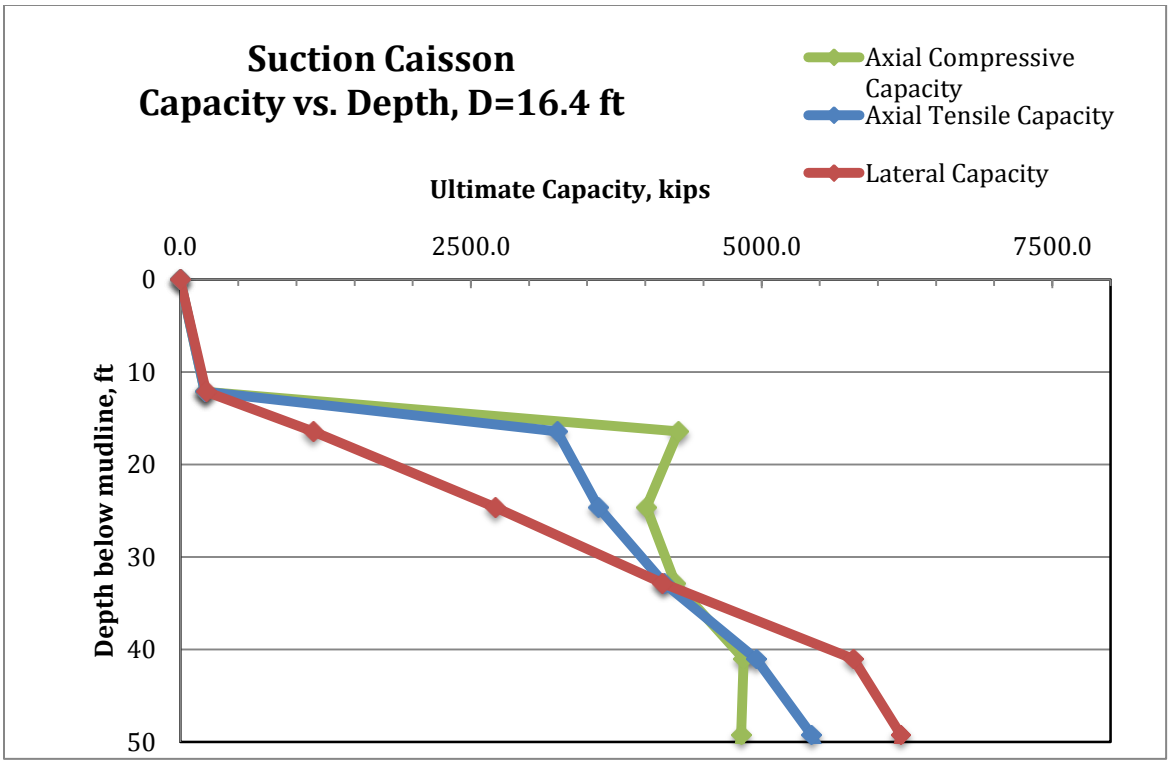

Figure 39: Graph of caisson capacity vs. depth for a caisson diameter of 16.4 ft.

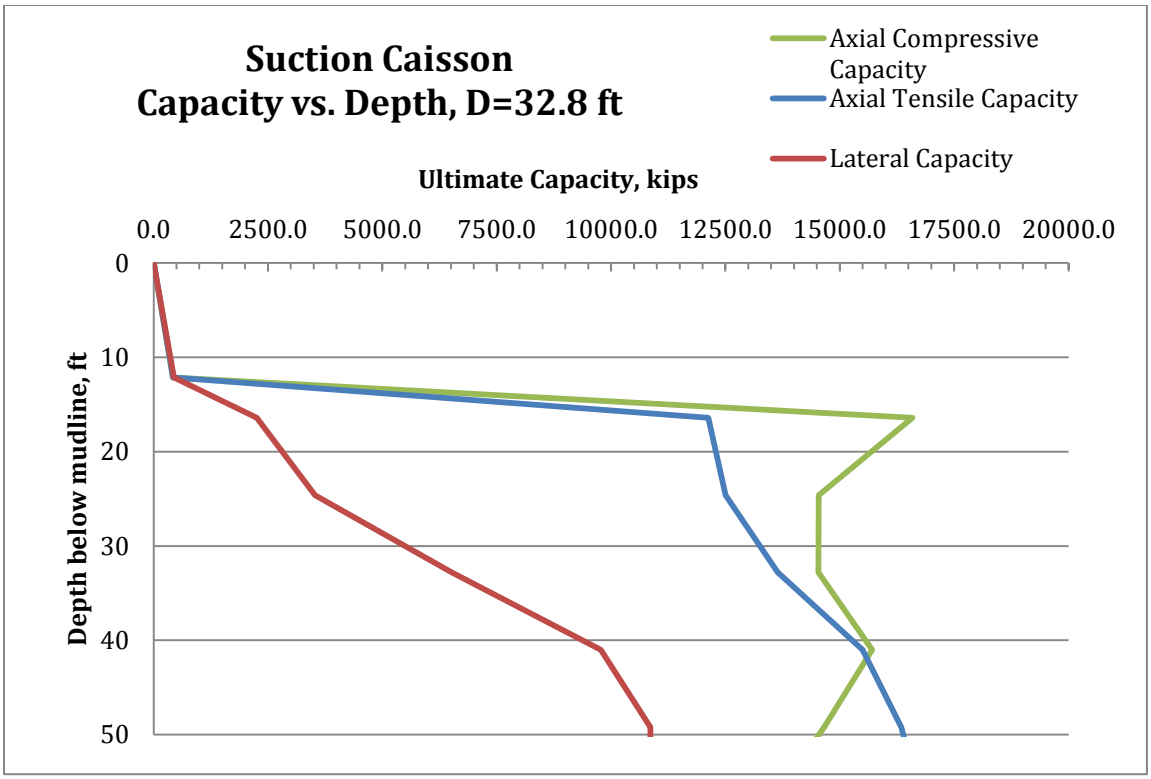

Figure 40: Plot of caisson capacity vs. depth for a caisson diameter of 32.8 ft.

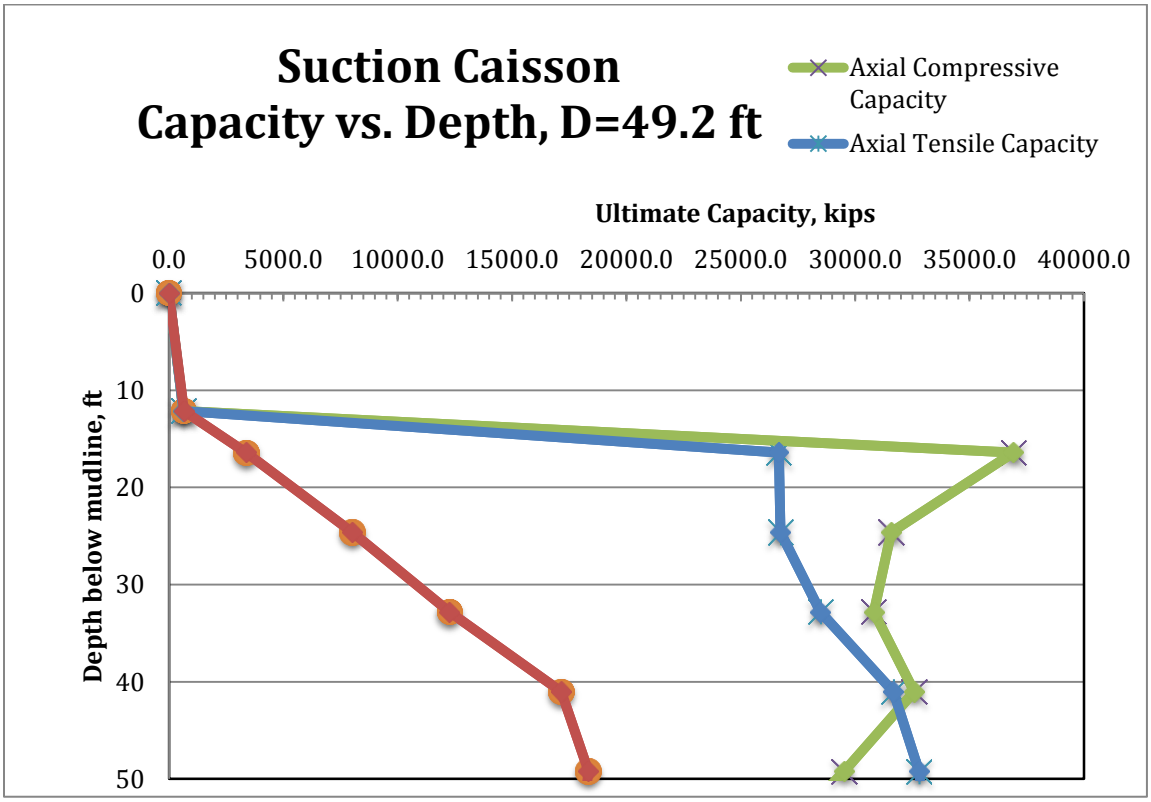

Figure 41: Plot of caisson capacity against depth of caisson with a diameter of 49.2 ft.

From the above plots we see that the capacity of the foundation in tension, compression, and laterally increases with increasing caisson diameter and depth. Therefore the desired capacity of the caisson can be achieved.

The graph below shows the plotted allowable capacity of the foundation (the vertical lines) and the actual capacity provided by the foundation plotted against the depth of foundation penetration into the seafloor for a caisson having a diameter of 16.4 ft. It can be seen from this plot that this diameter is not large enough no matter how deep penetration can be achieved to withstand the applied loads in tension, compression, and laterally.

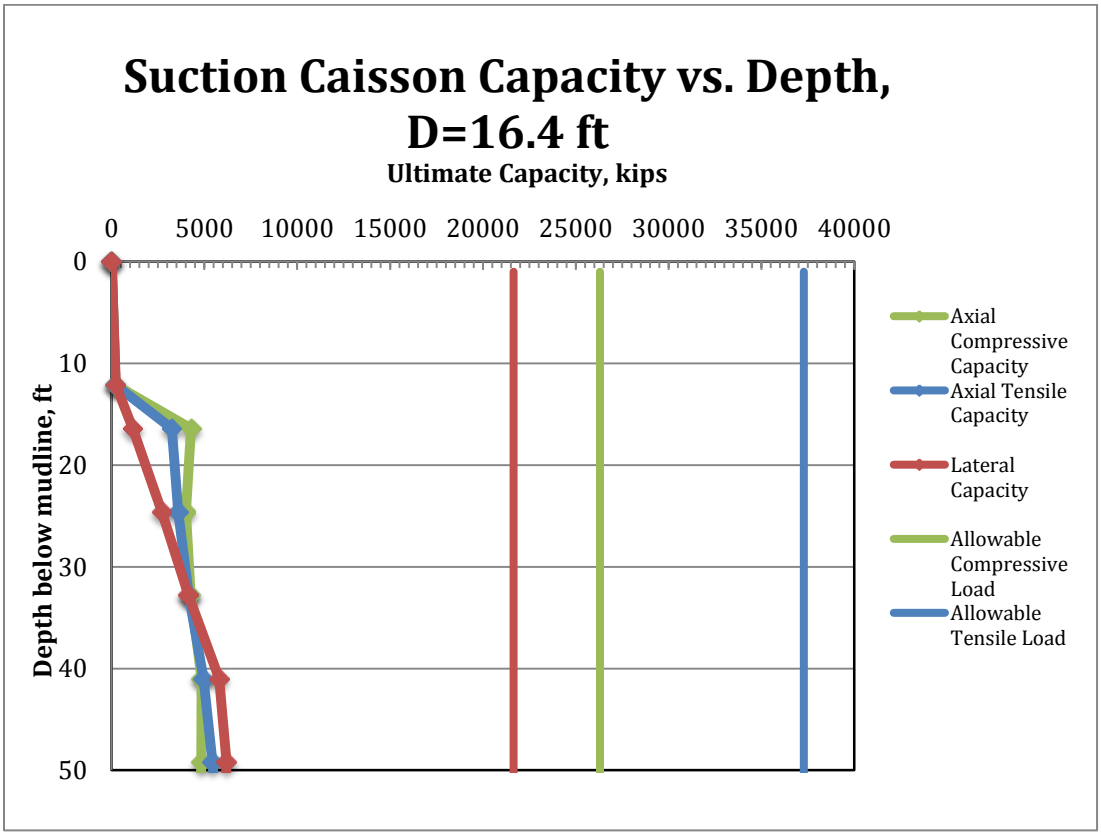

Figure 42: Cassion foundation capacity and applied factored loads for diameter of 16.4 ft.

The analysis of several foundation sizes at various depths was completed. The selected foundation size is 44.3 ft in diameter and 81 ft deep. The plot below shows that this diameter ranging this depth will provide the necessary capacity to

withstand the applied loads. The calculation includes in the industry standard factor of safety of 1.5.

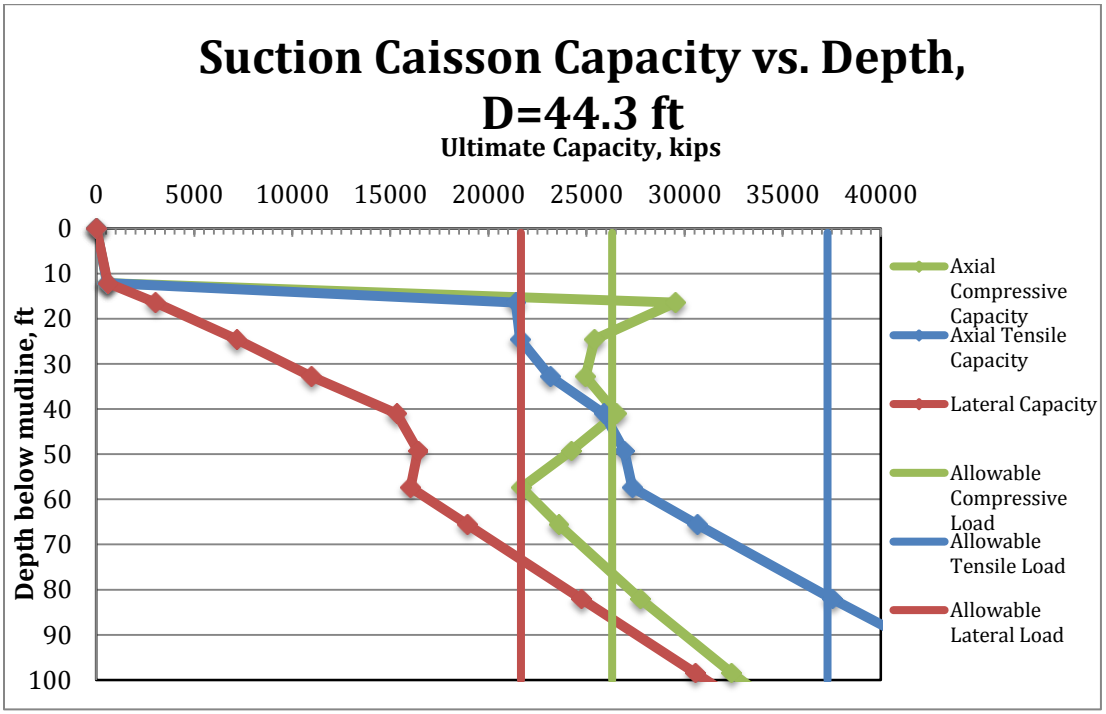

Figure 43: Suction Caisson Capacity vs Depth, D=44.3 ft

The above plot show that the compressive capacity is achieved at a depth of 40 feet, the tensile capacity is achieved at a depth of 81 feet, and the lateral capacity is achieved at a depth of 75 feet. It can be seen that the foundation is governed by tension. Therefore the foundation of this size must extend to a depth of 81 feet into the soil. As noted before, the extent of the provided soil data is only 50 feet. The additional depth's capacity was estimated using a direct extrapolation technique. When additional soil data is completed this capacity should be re-evaluated.

The thickness of pile walls is given by the following equation:

Equation 30: Pile thickness in both U.S. (inches) and metric units (mm). (API).

$$\left.\begin{array}{l} t = 0.25 + \dfrac{D}{100} \\ \text{Metric Formula} \\ t = 6.35 + \dfrac{D}{100} \end{array}\right\}$$

The variables in the above equation are defined as:

t: thickness

D: diameter

Caissons are generally fabricated from steel sheets shaped. It is recommended that the caissons be made out of 1 inch steel plate. Finite element analysis should be performed on the caissons to better understand the necessary thickness for installation. The grade and specification of steel shall be selected and designed in accordance to ASD or LRFD methods. The soil's content of corrosive substances such as sulfur and chlorine and soil acidity is currently unknown. To prevent possible corrosion, the caisson's steel should be coated with a zinc coating or a test for corrosion should be made during further geotechnical exploration.

The caissons shall have stiffeners added to the top annulus to support the connection of the substructure trusses and the caissons. These stiffeners will be designed to be adequate to prevent deflection and support the moment, axial force, and shear applied. Additionally, stiffeners will be added to the inside of the caisson along their length. These stiffeners shall be designed to adequately support the caissons shape as it penetrates the sea floor. They will provide support from thin shell buckling and lateral deformation. They will also slightly affect the calculations for capacity of the caisson and should be taken into consideration though the affect will be small (Byrne, clay). It is suggested that the stiffeners be W12x40 placed at regular intervals around the circumference of the caissons.

The design of internal stiffeners is governed by the installation of the structure. Stiffening should be implemented to prevent side shell buckling. When the

calculations for installation are performed finite element analysis should be done to understand where stiffeners are needed and to what degree. The calculation for installation will also determine what surcharge and pressure differentials the caissons will experience. The caissons should be designed structurally for this pressure.

Installation will begin with penetration through the short sand layer and continue through the clay layer until required penetration depth is reached. The installation of the caisson will require the use of ballasts for the portion of the penetration due to self-weight and the use of suction for additional penetration. The penetration resistance as the foundation sinks due to self-weight is shown in the equation below. It is a function of the bearing capacity and the adhesion on the inside and outside of the caisson.

Equation 31: Penetration resistance due to self-weight (Bryne, clay).

$$V' = \underbrace{h\alpha_o s_{u1}(\pi D_o)}_{\text{adhesion on outside}} + \underbrace{h\alpha_i s_{u1}(\pi D_i)}_{\text{adhesion on inside}} + \underbrace{(\gamma' h N_q + s_{u2} N_c)(\pi D t)}_{\text{end bearing on annulus}}$$

The variables are defined as:

S_u: shear strength with the numbers denoting the layers.

α: friction factor with the numbers denoting inside and outside

γ': effective soil unit weight

h: height of soil layer

N_q: bearing capacity factor for loading (usually 9 in clays)

N_c: bearing capacity factor for cohesion

This equation is also used for capacity in compression of the caisson. The bearing capacity factor for loading, N_q, is usually taken to be 9 in clays.

Once the self- weight penetration phase is complete, the suction-assisted penetration begins. The limits to the maximum attainable suction is limited by the absolute pressure at which the water cavitates, the minimum absolute pressure that can be achieved by the given pump design, the minimum relative pressure that can be achieved by the pump (Bryne, clay). Therefore the reverse being capacity failure is given by:

Equation 32: Reverse bearing capacity for a caisson foundation with suction applied (Byrne, clay).

6

$$-s + \gamma' h + \frac{\pi D_i h \alpha_i s_{u1}}{\pi D_i^2 4} = \gamma' h + \frac{\pi D_o h \alpha_o s_{u1}}{\pi \left(D_m^2 - D_o^2\right)/4} - N_c^* s_{u2}$$

The variables are defined as:

s: applied suction

S_u: shear strength with the numbers denoting the layers.

α: friction factor with the numbers denoting inside and outside

γ': effective soil unit weight

h: height of soil layer or depth of penetration

N_c: bearing capacity factor for a deep strip footing in clay (typically 9 is used)

D_o: outside diameter

D_i: inside diameter

The above equation can then be solved to calculate the required applied suction necessary to reach desired penetration, h. Following this calculation, ensure that the selected pump can achieve this level of suction.

Additional analysis in finite element software should be done to ensure that the foundation will affect the soil in the predicted fashion. Soil analysis up to two times the depth of the foundation should be examined. This will ensure that the calculated

resistance to penetration is accurate and that the limited differential pressure is great enough to reach the desired penetration depth. It will also ensure that the caissons are adequately designed structurally to withstand the high pressures applied during installation.

Additional calculations should be done to ensure that the caissons have adequate vibration capacity. This calculation is out of the scope of this stage of the design but future projects should analyze.

In summary, the foundation will consist of four suction caissons made of 1” steel plate. Each caisson will be 44.3 ft in diameter and 80 ft in length. The estimated weight of each caisson is 500 kips. The addition of stiffeners of W 12 by 40s should be made along the insider of the caissons to prevent thin plate shell buckling and the effects of high differential pressure upon installation.

Construction Methods

Construction Plan

On July 1, 2012 the complete blue prints for the design will be sent to Thompson Metal Fabrication. Thompson Metal Fabrication will begin to build the four separate parts and prepare them to be loaded on the barge for the final construction site. Thompson's will be in charge of making sure all of the connections are welded to specifications. The four parts of the structure that will be created are:

1. the substructure connected to the four caissons with four trusses
2. the superstructure will be created in two parts from the middle of the disk down
3. and from the middle of the disk up
4. the platform that goes on top will be the last section.

Once the barge is loaded it will start to head to Seattle where more cargo can be loaded on the barge to help bring the transportation cost down. June 11, 2013 will be the date that the barge will leave Seattle for Alaska. It will take approximately five weeks for the barge to make its journey. The barge will have to stop in Anchorage to unload the excess cargo and pick up cement materials for the trip out to the location.

Once the barge is docked in Anchorage the pieces will be assembled by ConocoPhillips' fabrication shop. The ConocoPhillips fabrication shop will assemble the trusses into the complete substructure. Once that is complete the four caissons will be welded and attached to the bottom of the trusses. This will form the complete substructure. It will take a total of two weeks to complete and inspect the welds. All of the welds must be inspected to assure they are up to code.

ConocoPhillips will then load the four pieces of the structure on to Crowley's barge. The four parts of the total structure are the top platform, upper half of the superstructure, lower half of the superstructure, and the substructure. (See Figure

44) These will be then shipped to the final location to be assembled and lowered into place.

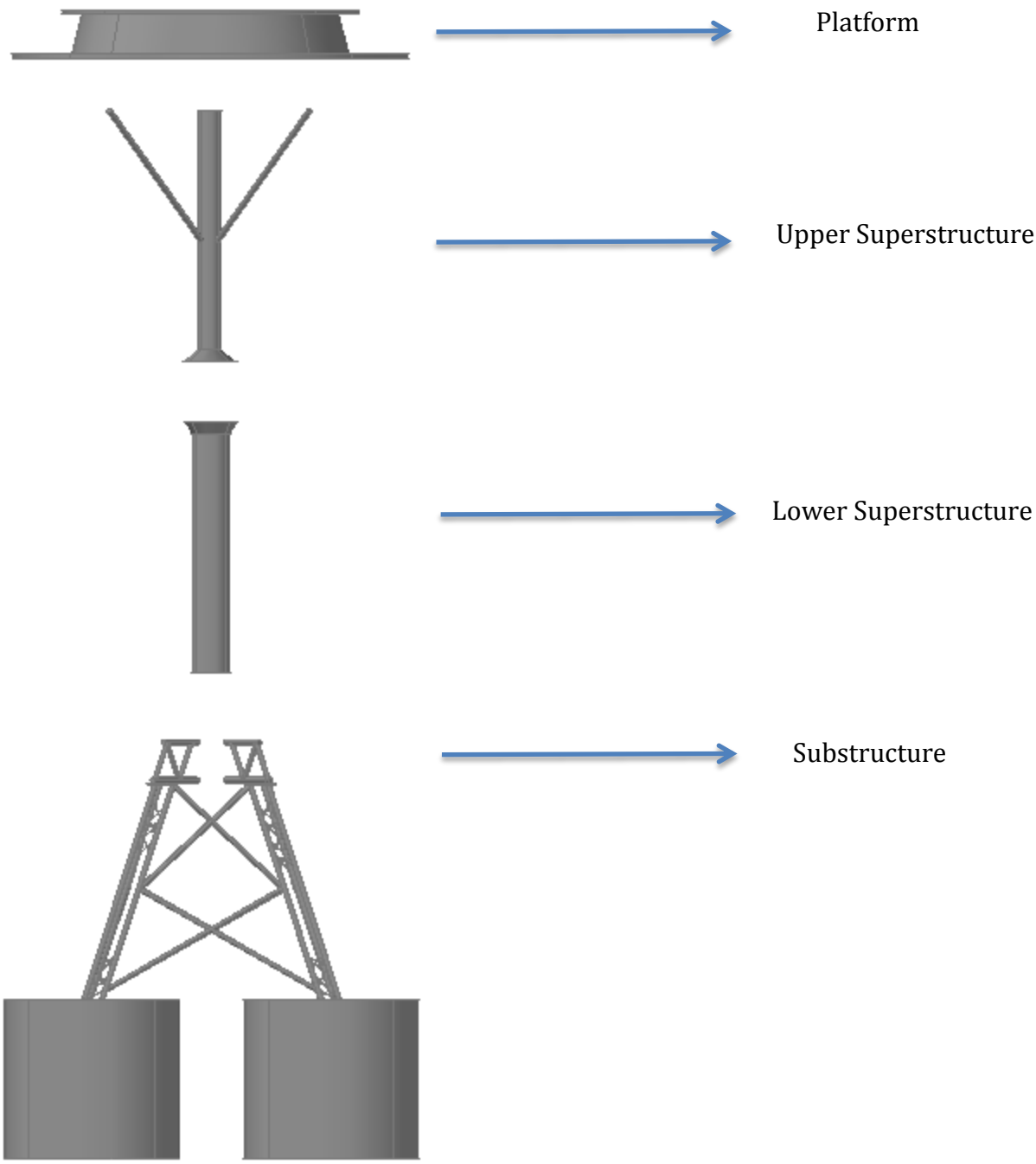

Figure 44: Structure Modules

The construction will begin on July 15, 2013 if the weather is fair and all of the ice has left the location. The first step in the construction process is to use the Crane Barge to lift the lower half of the superstructure into the air and set it into the substructure for the workers to attach them together by welding them. Once the welds are certified and everything meets the requirements the top will be capped and sunk. To reduce the buoyancy the structure will be flooded with water. (Corrosion inhibiter will be added to the inside of all of the truss pieces at Thompson Metal Fabrication's shop so when the internal pieces are flooded with water to reduces the force of buoyancy the sea water won't corrode. A corrosion coating will be applied to all the external metal surfaces that will be exposed to the elements. This will help keep any rust from forming on the metal surface for many years. Once all of the welds are complete they will be recoated with the corrosion inhibiter as a final step.)

Once the substructure reaches the seafloor the caisson installation will begin. Installation will begin with penetration through the short sand layer and continue through the clay layer until required penetration depth is reached. The installation of the caisson may require the use of ballasts for the portion of the penetration due to self-weight and the use of suction for additional penetration.

Once the foundation is installed, the void in the lower superstructure will be removed and concrete can be pumped into it. Once all of the concrete is in place the two cranes will then lift the upper superstructure over the side and start to lower the structure into the water on July 23 of 2013. Underwater welders will start to weld the connection between both superstructure parts. It is the most difficult part to finish and will take three days for this weld to be completed.

The next day the concrete for the top section will start to be pumped into the structure to the desired height. Once the concrete has its initial set, the platform will be lifted into place on August 1, 2013. The platform with the supports will then be attached and the barges will start heading back to Anchorage. The project

should be handed over to ConocoPhillips on August 10, 2013. See construction timeline below in Table 8.

Table 8: Construction timeline for selected alternative

Send blue prints to Thompson Metal Fab	Jul 15 -2012
Pick up of fabricated pieces	Jun-1-2013
Loading	Jun 2 - Jun 4
Head to Seattle to pick up other cargo	June-5-2013
Load Cargo in Seattle	Jun 6 - Jun 10
Begin transport of fabricated pieces	June -11-2013
travel	June 11 - Jul 15
Cargo Barge Arrives in Anchorage to Unload	Jul-10-2013
Pick up and load the materials for the cement mixtures	Jul-12-2013
Boats leave Anchorage for the final location	Jul-12-2013
Construction Season Starts (weather permitted)	Jul-15-2013
Set Caisson 1-4	Jul-15-2013
Set sub structure into place	Jul-19-2013
Attach sub structure	Jul 19 - Jul 21
Start to fill with concrete	Jul 20-2013
Concrete set up	Jul 21-Jul 26
Set final piece of super structure into place	Jul-27-2013
weld the two pieces together	Jul 27-Jul 30
Start to pump the concrete into the final piece of the super structure	Jul 29-2013
concrete left to set up	Jul 29-Aug 3
Skeleton Platform lifted into place and attached	August-4-2013
Platform constructed	Aug 4 - Aug 10
Barge return to Anchorage	August-10-2013
Helicopter flies out to station with computers	August-11-2013
Set up computers	Aug 12 - Aug 14
Set up Antennas	Aug 15 - Aug 17
Project finished	Aug-20-2013

Another alternative for installation would be to install the heavy substructure in pieces. Using much smaller barges the structure would be brought to the construction site in five different pieces. The upper superstructure and the lower superstructure would be on one barge, while the substructure pieces would be on another barge. The last barge would hold all the pieces for the platform and wouldn't be completely assembled, just the main trusses would be. That barge would also have all of the construction equipment that will be needed to build the structure.

Once all of the barges arrive at the given location each one of the caissons would be prepared to be lowered into place. The barge with the crane on it would move into location using GPS to get an exact location. The caisson would then be lifted over the side of the barge and lowered over the side. Once it hits the sea floor the pump would be turned on to start to set the caisson suction procedure. The next day the exact process would be repeated with the next caisson. Once all four of the caissons are set into the desired location the substructure could be installed. The caissons will continue to be pumped until the final part of the substructure is in place because the weight of the substructure, and the lower superstructure with the concrete is needed to help the caissons penetrate into the depth that is needed.

The crane would then lift the assembled substructure with the lower superstructure and lower it into place. As soon as it is lowered into place the divers would start to set the pins to hold the trusses in place until the next divers descend to start the fully penetrating welds to attach the substructure to the caissons. As the welding is started on the caissons, the concrete would be pumped into the superstructure to help give more weight for foundation penetration.

The connection between upper superstructure and lower superstructure would be the same as originally planned. The platform would have a skeleton built to help reduce its weight. The skeleton would be attached to the top of super structure Part A. Then the platform could be assembled.

The reason that this method was not the selected alternative is it has a great risk of loss of human life. The water isn't very clear and visibility at the bottom near the sea floor and would be very difficult to overcome. It would be putting the divers that connect the caissons to the substructure in great danger. If a big wave were to hit the barge that is holding the substructure in place above the divers, the substructure could slide off its footing and crush a diver. This alternative could be researched more to see if the loss of life could be reduced or even gotten rid of with a submarine being used to perform the welds.

Transportation Methods

The transportation of the structure will be completed using Crowley Maritime Corporation. Crowley is a local logistics and sealift company that has experience working with ConocoPhillips projects and working in the Arctic. They own vessels that can accommodate up to 130 feet wide and high loads, up to 4,200 pounds per square foot uniform loads, have experience in offshore development projects and experience in logistics in remote locations. These vessel sizes will accommodate the entire structure modularly and the two cranes necessary to lift each piece in place.

William Hill, Director of Projects at Crowley, has discussed this logistical plan with the Chukchi Sea Team of 2012. The barge and crane arrangement that the project requires will need to be mobilized for the project. It will cost about $30 million dollars to mobilize the barge and crane arrangement and then cost about $1 million dollars/day in use. Other options to this arrangement are forgoing the crane barge because it must be mobilized and doing a controlled float into place using ballasting. While this option might reduce costs, the nature of the caisson foundation installation is sensitive and has not been completed historically using anything but cranes. The team was hesitant to select an installation method that was not proven because the team has limited expertise in these areas. Another option would be using 3 to 4 barges that are smaller and a crane barge that do not require mobilization. It would then cost about $2.2 million/barge. The crane barge available

for this option has a capacity of 100T to 150T. This alternative should be analyzed again with Crowley once the design is in its later stages and more details about the sizes and weights are known. The barge likely to be used for this project fitted with cranes is shown below.

Figure 45: 500 series barge to be fitted with necessary cranes can accommodate the structure (Crowley).

It can be seen that the small cranes with the capacity of 100 to 150 tons will not be able to lift the structure modularly. In the table below the weight of the respective pieces are shown. It can be seen that the weight of the substructure and foundation and the platform are greater than the capacity of these smaller cranes.

Table 9: Table summarizing the approximate weights of the four pieces of the Chukchi Sea weather station.

Piece	Description	Weight (T)
Substructure	Caissons attached to 4 truss legs	1250
Superstructure A	Bottom of superstructure, column with diameter of 15 ft, w/o concrete	400
Superstructure B	Top of superstructure column with ice disk, w/o concrete	400
Platform	Manufactured by CoP	475
Caissons	4 foundations that attach to truss legs	1000

The arrangement of the mobilized crane with the dual cranes will be something like pictured in the image below. The Chukchi project will have two cranes and be filled with the structural components and equipment.

Figure 46: Barge and crane configuration similar to the Chukchi project arrangement.

The structure will be fabricated modularly by Thompson Metal Fabrication in Virginia, USA. Each component (platform, superstructure top, superstructure bottom, substructure trusses, and caisson foundation) will have the steel components fabricated there. The pieces will then be loaded onto the mobilized large barge arrangement coordinated by Crowley.

This loading process will include the loading and discharging of trailers, engineering and strengthening the loads as necessary, tie down and deck flushing. They will organize the towing assistance for moving in and out of ports and harbors, docking,

and fueling, necessary ice escorts, and fuel stops. They will also organize the ice reconnaissance that will include an air charter and the hiring of an ice master.

Following loading, the barge will then travel to Anchorage, AK and pick up the concrete materials, mixing trucks, have the final welds and configurations completed, and be reloaded and head to the Chukchi Sea location. The journey by barge from Virginia to the Chukchi Sea is approximately 10,500 miles. See the map below.

Figure 47: Route between the Chukchi Sea and Virginia on open ocean (Google maps).

It is estimated that the barge will travel between 8 mph and 15 mph based on experienced winds, currents, and storms. With this, it is estimated that it will take 38 days to travel from Virginia to the Chukchi Sea. This estimate is made using the

average travel speed and does not include stopping and fueling time nor does it include the final fabrication time completed in Anchorage, AK

Crowley Marine Corporation will design the barge loading to ensure that the structures do not experience damaging forces as they experience live loads from the barge. The large dimensions of the barge in use will prevent additional structural support required for the structure to travel. Because the project does not have to dock other than in well-established ports Crowley does not need to design a docking plan, dredging plan, or draft plan.

Upon arrival on the Chukchi Sea location, installation will begin in accordance to the construction plan (described in the Construction plan section). The barge will remain in place for the installation of the structure. Once the structure is installed the barge will depart.

Upon return the barge will be empty unless other arrangements are made. Possible arrangements that could offset the transportation cost are filling the barge with cargo from Virginia to Anchorage on the forward trip, picking up cargo in Anchorage, AK and transporting it to anywhere in the USA area on return, and after installation bringing the barge to Prudhoe Bay, AK area and picking up cargo. When the design is finalized these options should be coordinated between ConocoPhillips, Crowley, and other involved parties.

Cost Estimate

The cost analysis for the structure was broken in to four major components: labor, equipment, materials, and transportation. Costs for each were researched and compiled throughout the course of the project development as the design portions were nearing completion. Cost estimates were gathered from a variety of sources based on recommendation from project advisors or previous experience. The first step in cost analysis for this project was based on the construction season and an estimated construction schedule developed early in the project scope. The construction plan determined for how long labor, equipment, and transportation components would be needed. At the outset of the project it was an assumption that because of the remote location, transportation costs would be a large component of the overall cost. Because of this, transportation costs were the first to be explored. Based on the design, the required size of barge was determined and Crowley Marine was consulted to determine what barges are available and at what cost. They presented two options: three smaller barges and a separate crane barge or one large barge with a crane included. Crowley estimated that the three smaller barges and a crane barge would cost approximately $2M per day and based on the estimated 70 day usage, the total would be $140M. The larger barge with crane included costs $30M to mobilize from Southeast Asia and then $1M per day to operate. This comes to $100M total and so this option was chosen to include in the estimate. It is assumed that the cost of the barge includes a full crew and crane operator.

Once the construction duration was estimated, on-site labor costs could be taken into account. For labor estimates, Cruz Construction out of Palmer, Alaska was contacted. Cruz specializes in remote construction projects in Alaska. Based on the design, three welders, two operators, three laborers, a site manager, a mechanic, and a site engineer would be necessary to complete the project in the scheduled timeframe. Since the majority of the structure will be prefabricated, a skeleton crew is appropriate. The labor costs per day were determined and are tabulated in Table 10. Travel expenses were also included. The construction crew will be flown to Fort Wainwright, Alaska where they will be met by the barge on its way to the site. This

required fewer days to pay the crew than if they were to meet the barge in Anchorage.

Material costs were estimated by determining the amounts of each material in the structure. These estimates were provided by the design teams and were updated as needed as the project progressed. Since so much of the structure will be prefabricated steel and exact estimates for each prefabricated component would be difficult to obtain, a price per pound was determined and multiplied by the weight of the steel. The cost for the purposes of this report is $5 per pound of prefabricated steel. If the project were to move forward, a proprietary estimate would be obtained by Thompson Metal Fabricator out of Virginia. The cost of concrete was obtained from Anchorage Sand and Gravel out of Anchorage Alaska. The price for 4000 psi ready-mix concrete with air-entrainer, superplastisizer, and accelerator admixtures was given at $120 per cubic yard. Reinforcing rebar to be used in the concrete column was estimated at $0.40 per pound.

The final portion of the cost estimate was heavy equipment rental. Equipment costs were provided by ConocoPhilips and Cruz Construction. Included is a work boat to house the construction crew. A marine crew, food, and fuel are included in the daily cost of the work boat. The estimated cost of the workboat was $50,000 per day. Construction equipment includes cement mixing trucks, a forklift, and a fuel storage tank. Each of these items would be rented at a monthly rate. These rates are tabulated in Table 10. Diesel fuel was quoted at $4.50 per gallon. Other specialized equipment such as welding equipment, underwater welding equipment (if necessary), safety equipment, tools, hoses, mobile office equipment, remote communication equipment, storage containers, etc. are to be included in miscellaneous lump sum value of $40,000.

As is standard in the industry a 20% contingency was added to the total cost of the project. The total cost without the contingency was approximately $115M. The total with the 20% contingency included was $135M.

Table 10: Cost Estimate Breakdown

On-Site Labor	Rate/day	Days	Travel	Total
Welder	$1,500	28	$2,500	$44,500
Welder	$1,500	28	$2,500	$44,500
Welder	$1,500	28	$2,500	$44,500
Operator	$1,500	28	$2,500	$44,500
Operator	$1,500	28	$2,500	$44,500
Laborer	$1,500	28	$2,500	$44,500
Laborer	$1,500	28	$2,500	$44,500
Laborer	$1,500	28	$2,500	$44,500
Site Manager	$2,000	28	$2,500	$58,500
Mechanic	$2,000	28	$2,500	$58,500
Site Engineer	$2,500	28	$2,500	$72,500
		On-Site Labor Total		$545,500
Equipment	**Rate**	**Period**	**Total**	
Work Boat	$50,000/day	28 days	$1,900,000	
Cement Truck	$5,000/month	1 month	$5,000	
Cement Truck	$5,000/month	1 month	$5,000	
Forklift	$5,000/month	1 month	$5,000	
10,000 Gal. Fuel Tank	$5,000/month	1 month	$5,000	
Fuel	$4.50/Gal.	10,000 Gal	$45,000	
	Misc. Equipment Lump		$40,000	
	Heavy Equipment Total		$2,005,000	
Materials	**Cost/unit**	**Units**	**Total**	
Concrete	$120/cu yd	300 cu yd	$36,000	
Rebar	$0.40/lbs	83,000 lbs	$33,200	
Prefabricated Steel	$5/lbs	2,420,000 lbs	$12,100,000	
		Materials Total	$12,169,200	
Transportation				
Crane Barge Mobilization	$30,000,000			
Crane barge cost/day	$1,000,000			
Days	70			
Transportation Total	$100,000,000			
Grand Total	$114,719,700			
Total with 20% contingency	$135,000,000			

Reuse and Mobility

The purpose of the weather station in the Chukchi Sea only requires it to be in use for one year. Designing and constructing the monitoring station is costly, and it seems that the benefit to cost ratio is too low to consider it feasible if its intended life is only the single year. However, if the monitoring station's structure were to be deconstructed, moved, and used to fulfill another purpose, then it would seem much more practical.

The idea of moving and reusing the structure played through the entire design process. The selected foundation alterative can be un-installed by reversing the installation process. The contents of the topside structure could be adjusted appropriately and relocating the structure could be done with ease. Then each piece could be disconnected and placed onto a barge. Therefore, the entire structure can be salvaged and used again. Other future uses for the structure could include, but are not limited to: spill response, power generation, scientific research, and, of course, weather monitoring.

Permitting and Other Requirements

Due to the threat of environmental impacts in the area of construction, permitting is required. The location of interest is outside of the State of Alaska's jurisdiction and is in federal waters; so only federal permitting is needed. Permits that are required would be obtained from the United States Coast Guard, U.S. Fish & Wildlife Service, the National Oceanic and Atmospheric Administration, the EPA, and the U.S. Army Corps of Engineers.

United States Coast Guard

The United States Coast Guard requires lighting and other aids to navigation for structures in federal water. The platform will require lights and markings to make the structure visible to nearby vessels and aircraft. These requirements coincide with that which was already mentioned in the previous section. See the platform safety section of the report for more detailed information on the Coast Guard requirements.

U.S. Fish & Wildlife Service

Permits required by the U.S. Fish & Wildlife Service are related to the Endangered Species Act (ESA). If the proposed structure is in critical habitat of threatened and/or endangered species more is involved. Threatened and endangered species in the Chukchi Sea include: polar bear, spectacled eider, and the short-tailed albatross. However, of all the wildlife, the location of the weather station is only in critical habitat of the polar bear (see Figure 48).

Figure 48:Polar Bear Critical Habitat

National Oceanic and Atmospheric Administration

National Marine Fisheries Service (NMFS) under the National Oceanic and Atmospheric Administration (NOAA) is in charge of permitting for affected marine life. The impact of the marine life would need to be assessed to see if permitting would be required. This should be done in an Environmental Impact Statement (EIS). Marine life that may be affected by the construction of the weather station would be walrus, seals, and variety of species of whale.

Although more research needs to be done, the migration of the bowhead whale has been looked at, and throughout the years they have not been in the area during the proposed time of construction.

Environmental Protection Agency

The EPA requires permits for emissions. The finished weather station will not produce any emissions; however, secondary emissions will be given off during construction. A permit may be required by the Clean Water Act and is based on the possible emissions during construction. Emissions during construction are expected

to be low and for duration of less than one month, and at this point in design, the agency does not believe a permit would be required at all.

U.S. Army Corps of Engineers

The U.S. Army Corps of Engineers requires permits for construction activities in navigable waters of the US. This structure will be classified as scientific instrumentation under their jurisdiction.

Fulfillment of Course Outcome

The purpose of this senior level civil engineering course at the University of Alaska Anchorage is to prepare students for the professional world. It also will evaluate their understanding and knowledge of that which is taught in the curriculum. The design process for the Chukchi Sea weather station exercised each of the outcomes proposed in the class.

The first outcome fulfilled was that of identifying problems and opportunities, and to develop related engineering design criteria and form alternative solutions to meet the clients' needs. This needs to be done while protecting the public health, safety, and welfare, and using knowledge and skills learned in the program. The need for a weather station and the extreme conditions in the Chukchi Sea was given as the "problem" to be identified. Knowledge and skills developed in the undergraduate curriculum at UAA were used to analyze forces and loads and formulate alternative solutions to meet requirements, and research into permitting was done in order to assure the protection of public health and safety.

Secondly, the students working on the design of the weather station formed multidisciplinary teams to fulfill the second outcome. The teams, although small, focused on design, constructability, and implementation as well as any other issue that arose. They focused on diverse aspects of the design process including technical, social, economic, and aesthetic objectives, as mentioned in the outcome summary. While going through the design process, a professional engineering firm was simulated. Doing so provided more understanding of the practicing civil engineer's world and the engineer's responsibilities.

Examples of the fulfillment of the third outcome are writing a professional report, paying attention to laws and regulations that govern certain aspects of the design, and identifying ethical responsibilities directly related to the project. The fourth outcome that was achieved is recognition of the need for ability to engage in life-

long learning in the context of civil engineering professional practice. As a senior in the civil engineering program at UAA, taking the design class and working on an actual design, it is realized that more knowledge is always necessary, and one can never stop learning. Although knowledge from the curriculum was utilized in the design of the weather station, much more research and learning needed to be accomplished in order to complete the project. Lastly, the ability to communicate effectively with engineering drawing and technical visuals, written reports, and oral presentations was demonstrated repeatedly throughout the semester's class work. This can be seen throughout this report, and in the plan set. This fulfills the fifth and last outcome for the course.

Conclusion

The design of the weather monitoring station provided some unique challenges. The single column superstructure needed to be sufficiently designed to not fail under large axial and lateral loading. The substructure trusses needed to transfer those forces to the foundation and not fail. The foundation needed to be able to resist immense pullout forces. The structure had to be transported to the remote location of the Chukchi Sea. Sufficient equipment needed to exist to install the structure in a timely manner. Cost minimization was considered as much as possible in the scope of our conservative design, but didn't govern it. The proposed structure meets all of the design criteria and fulfills its purpose. With heavy literature review, the technical teams were able to develop the most feasible design. Although the design is around 50% complete, it could use further development to increase constructability and reduce cost; its core design is the best for the tasks it needed to accomplish.

Recommendations

In order for the design process to continue on the Chukchi Weather Station there are still several things that require more research than what we were able to determine during the course of the project. There are also many aspects of this structure, its construction, and its operation that were not analyzed that would need to be.

When beginning construction of any type, the foundation is always vastly important to the overall design of the structure because it is where the structure starts. The analysis of the foundation was based on an insufficient amount of data to make real informed decisions of how to construct this weather station; the initial reports only detailed the soil specification on the sea floor for the first fifty feet. For this project to go to the next stage of design a more detailed study of the type of soil that is in the area would be required. This would need to include soil testing to an estimated depth of two times that of the expected foundation.

All of the environmental loads that will be assaulting the building are calculated and estimated as well as possible but the location out in the middle of the Chukchi Sea still leaves a lot of unknowns. The wind, waves, and ice loadings are not constant, they vary all the time. With the collection of more data, the design criteria could be narrowed down even more. The force caused by the ice is the greatest uncertainty that has to be taken into consideration with this design. That is because no one knows for sure what the ice really is like out there. Many experts in the field gave us their educated opinion of what the depth of the consolidated ice is but their opinion was not sufficient to finalize a design.

Resonance is another aspect of the structural design for the weather station that would need further considerations. During the course of the project, resonance was discussed and it was very lightly investigated but not enough to know the real life ramifications. The majority of the loads on the structure are lateral and very inconsistent. With loads that will be varying as much as the wind, waves, and ice there is a change that the specific circumstances could combine to cause the entire

structure to sway. If forces continue to impact it and cause the swaying to go into resonance, it could fail. Even though this is an unmanned facility there is still no desire to see it fail. All precautions need to be looked into.

Another force that was not considered in the design, but should be, is that of seismic loading. Although the location of the weather station is not a very active seismic area, in the event of an earthquake the stability of the structure may be in danger. This needs to be considered, especially for flexible structures.

The largest portion of the estimated cost of this project comes from the transportation of all the materials to the Chukchi Sea. Using barges for everything from the continental United States was determined to be the most economical but there are still many options that could be considered. Certainly one mode of transportation is much simpler and often that translates into a more cost effective design. With how far some of the pieces for the structure will have to travel, it might be better to use several different types. It would also be worth looking into any alternative locations in which the pieces can be fabricated. Thompson Metal Fabrication is on the east coast of the United States, if a different fabricator can be located on the west coast then that could save millions of dollars.

The cost analysis of the weather station is one of the issues that would need further investigation because of so many uncertain properties. The total cost depends on a lot of different variables; where the products come from or how many will be needed. All of this changes as the overall design adjusts. What also affects the cost is with so many small pieces, it requires knowing precisely everything in order to be able to estimate the cost.

The connections for all the different members were not calculated. Figuring out the exact connection requirements would take this design much closer to the 100 percent design. The connections are very small in the scope of the project but are very important and cannot be ignored. There was not enough time to calculate the connections for all the different members.

The construction method is by far not a complete schedule because in developing the plan, no one with real experience in this type of project was actually directly involved. Experienced people were consulted and the construction schedule will show the help that they provided but it would be best to enlist more help in determining a better schedule and plan of action.

For the scope of this year's project, the considerations that had to do with the maintenance and operation of the weather station were predominately left for future engineers to carefully consider. Maintenance issues that need to be analyzed are things like power to run the platform functions and especially the payload. Since this is an unmanned station there is a real possibility of snow building up on the platform or some other damage to the structure that would cause the helicopter to not be able to land. Fuel storage for the helicopter on site would also need to be considered.

Lastly, considerations should also be made regarding the effects of marine growth and whether their effects would be detrimental to the structure, or whether the structure would have a positive effect on the marine environment acting as cover for smaller marine creatures. If marine growth was considered to be detrimental to the structure, coatings are readily available that deters this from happening, such as copper oxide bottom paint used on many hulls throughout Alaska with a useful life of roughly 10 years. Significant marine growth would most likely only be a consideration for the lower section of the structure due to the annual scraping due to ice on the column section.

Recognition

Alex West (UAA, PND)

Jeffery Eide (UAA)

Steven Halcomb (PND)

Mike Moore (Thompson)

William Hill (Crowley)

William Scott (CoP)

Dr. Joey Yang (UAA)

Kenton Braun (PND)

Dr. Orson Smtih (UAA)

Dr. Scott Hamel (UAA)

Dr. Andy Mahoney (UAF)

John Carlson (Cruz)

Kathleen Cole (NOAA)

Dr. Aaron Dotson (UAA)

References

Allen, Edward, and Joseph Iano. *Fundamentals of Building Construction: Materials and Methods*. 5th ed. Hoboken: John Wiley & Sons, Inc., 2009. Print.

Ambrose, J. E. *Design of building trusses*. New York: J. Wiley, 1994. Print.

American Bureau of Shipping. *Rules for Building and Classing Mobile Offshore Drilling Units*. 3. Houston: ABS, 2005. Print.

American Petroleum Institute. "API RP-2A WSD". *American Petroleum Institute.* December 2000. Print.

American Society of Civil Engineers. *Minimum Design Loads for Buildings and Other Structures*. New York, NY: American Society of Civil Engineers, 1993. Print.

Bye, A. "Geotechnical Design of Bucket Foundations." *Offshore Technology Conference*. May 1995. (1995): 1-15. Print.

Byrne, Byron W., and Guy T. Houlsby. "Experimental Investigations of Response of Suction Caissons to Transient Vertical Loading ." *Journal of Geotechnical and Geoenvironmental Engineering.* November 2002. (2002) Print.

Byrne, B.W., Houlsby, G.T. "Design procedures for installation of suction caissons in clay and other materials". *Geotechnical Engineering.* April 2005. (2005):75-82. Print.

Byrne, B.W., Houlsby, G.T. "Design procedures for installation of suction caissons in sand". *Geotechnical Engineering.* July 2005. (2005): 135-144. Print.

Choi, Young Jae. "Reliability Assessment of Foundation for Offshore Mooring System under Extreme Environments." Diss. University of Texas Austin, 2007. Print.

Deng, Weimin., Carter, John P. "Uplift Capacity of Suction Caissons in Uniform Soil".

Eide, Jeffery, and Alex West. "Chukchi Sea Weather Station." 2011. Print.

El-Gharbawy, Sherif Lotfy. "The pullout capacity of suction caisson foundations." Diss. University of Texas Austin, 1998. Print.

Erbrich, C. "Installation of Bucket Foundations and Suction Caissons in Sand-Geotechnical Performance." *Offshore Technology Conference*. May 1999. (1999) Print.

"Extreme Wave Height Estimation." *Online Global Wave Statistics*. BMT Fluid MEchanics, 2011. Web. 27 Mar 2012. <http://www.globalwavestatisticsonline.com/Help/estimation.htm>.

Gerwick, Jr., Ben C. Construction of Marine and Offshore Structures. 3rd. San Francisco: CRC Press, 2007. Print.

Høyland, Knut V., and Sveinung Løset. "Measurements of temperature distribution, consolidation and morphology of a first-year sea ice ridge." *Cold Regions Science and Technology*. 29.1 (1999): 59-74. Print.

Hsu, Teng. *Applied Offshore Structural Engineering*. 1. Houston: Gulf Publishing Company, 1984. Print.

Huang, Jun. "Geotechnical Design of Suction Caisson in Clay". *International Offshore and Polar Engineering Conference.* May 2003. (2003): 770-780. Print.

Hunkins, Kenneth L. "Tide and Storm Surge Observations in the Chukchi Sea." *Limnology and Oceanography* . 10.1 (1965): 29-39. Print.

Ibsen, Lars. "Design of a new foundation for Offshore Wind Turbines." Diss. Aalborg University, 2010. Print.

Iskander, Magued, Sherif El-Gharbawy, and Roy Olson. "Performance of suction caissons in sand and clay." *NRC Research Press Web*. May 2002. (2002): 576-584. Print.

Ismail, Nabil M. "Wave-current Models for Design of Marine Structures ." *Journal of Waterway, Port, Coastal, and Ocean Engineering*. 110.4 (1984): 432-448. Print.

Kamphius, J. William. *Introduction to Coastal Engineering and Management*. 1. 16. Singapore: World Scientific Publishing Co., 2002. 21-50. Print.

Kassimali, Aslam. *Structural Analysis*. 3rd. Toronto: Cl Engineering, 2009. Print.

Lepparanta, Matti. *The Drift of Sea Ice*. 2. New York: Springer, 2011. 55. Print.

Leppatanta, Matti, Mikko Lensu, et al. "The life story of a first-year sea ice ridge." *Cold Regions Science and Technology*. 23.3 (1994): 279-290. Print.

Mudge, T.D. et al. *Analysis of Ice and Metaocean Measurments, Chukchi Sea 2008-20011*. MS thesis. Prepared for ConocoPhillips by ASL, 2008-2011.

NGI. "Skirted Caisson Foundations for Offshore Structures". *NGI.* (4 April, 2012). Web. http://www.ngi.no/no/Innholdsbokser/Referansjeprosjekter-LISTER-/Referanser/Skirted-Caisson-Foundations-for-Offshore-Structures/

Nunnally, S. W. *Construction Methods And Management*. 8th. 2010. Print.

Obert, Keely M., and Thomas G. Brown. "Ice ridge keel characteristics and distribution in the Northumberland Strait." *Cold Regions Science and Technology*. 66.2-3 (2011): 53-64. Print.

Quimby, T.Bart. *A Beginner's Guide to ASCE 7-05*. Anchorage: 2011. Web. <http://www.bgstructuralengineering.com/BGASCE7/Contents.htm>.

Rognlien, B., and K. Eriksen. "Caisson Foundations for Jacket Structures." *International Journal of Offshore and Polar Engineering*. 4.3 (1994): 223-230. Print.

Schematic respresentation of a cross section of a first-year ice ridge or rubble field. 2009. Graphic. Arctic Moorings, Zoetermeer. Web. 26 Mar 2012. <http://www.offshoremoorings.org/moorings/2008/group a/iceformation.html>.

Serre, Nicolas. "Mechanical properties of model ice ridge keels." *Cold Regions Science and Technology*. 67.3 (2011): 89-106. Print.

Steel Construction Manual. 13th. Amer Inst of Steel Construction, 2006. Print.

Sukumaran, B., W.O. McCarron, P. Jeanjean, and H. Abouseeda. "Efficient Finite Element Techniques for Limit Analysis of Suction Caissons Under Lateral Loads." Print.

Sveinung, Loset. "Science and Technology for the Exploitation of Oil and Gas- an environmental challenge." *European Networking Confernce on Research in the North* . (1995) Print.

Taranath, Bungale. Structural Analysis and Design of Tall Buildings: Steel and Composite Construction. 1st. CRC Press, Print.

Timco, G.W., and M. Johnston. "Ice loads on the caisson structures in the Canadian Beaufort Sea." *Elsevier B. V.* (2004): 185-209. Print.

Tjelta, Tor-Inge. "Geotechnical Aspects Of Bucket Foundations Replacing Piles For The Europipe 16/11-E Jacket." *Offshore Technology Conference*. May 1994. (1994) Print.

Tjelta, T. "Geotechnical Experience from the Installation of the Europipe Jacket with Bucket Foundations." *Offshore Technology Conference*. May 1995. (1995) Print.

Appendices

Appendix A: Loads

Weigel Wave Table

Table 2.3 Wave Table

d/L_o	tanh kd	d/L	kd	sinh kd	cosh kd	n	d/L_o	tanh kd	d/L	kd	sinh kd	cosh kd	n
0.000	0.000	0.0000	0.000	0.000	1.00	1.000	0.22	0.909	0.242	1.52	2.18	2.40	0.646
0.002	0.112	0.0179	0.112	0.113	1.01	0.996	0.23	0.918	0.251	1.57	2.31	2.52	0.635
0.004	0.158	0.0253	0.159	0.160	1.01	0.992	0.24	0.926	0.259	1.63	2.45	2.65	0.626
0.006	0.193	0.0311	0.195	0.197	1.02	0.998	0.25	0.933	0.268	1.68	2.60	2.78	0.616
0.008	0.222	0.0360	0.226	0.228	1.03	0.983	0.26	0.940	0.277	1.74	2.75	2.93	0.608
0.010	0.248	0.0403	0.253	0.256	1.03	0.979	0.27	0.956	0.285	1.79	2.92	3.09	0.599
0.015	0.302	0.0496	0.312	0.317	1.05	0.969	0.28	0.952	0.294	1.85	3.10	3.25	0.592
0.020	0.347	0.0576	0.362	0.370	1.07	0.959	0.29	0.957	0.303	1.90	3.28	3.43	0.585
0.025	0.386	0.0648	0.407	0.418	1.08	0.949	0.30	0.961	0.312	1.96	3.48	3.62	0.578
0.030	0.420	0.0713	0.448	0.463	1.10	0.939	0.31	0.965	0.321	2.02	3.69	3.83	0.571
0.035	0.452	0.0775	0.487	0.506	1.12	0.929	0.32	0.969	0.330	2.08	3.92	4.05	0.566
0.040	0.480	0.0833	0.523	0.548	1.14	0.919	0.33	0.972	0.339	2.13	4.16	4.28	0.560
0.045	0.507	0.0888	0.558	0.588	1.16	0.910	0.34	0.975	0.349	2.19	4.41	4.53	0.555
0.050	0.531	0.0942	0.592	0.627	1.18	0.900	0.35	0.978	0.358	2.25	4.68	4.79	0.550
0.055	0.554	0.0993	0.624	0.665	1.20	0.891	0.36	0.980	0.367	2.31	4.97	5.07	0.546
0.060	0.575	0.104	0.655	0.703	1.22	0.880	0.37	0.983	0.377	2.37	5.28	5.37	0.542
0.065	0.595	0.109	0.686	0.741	1.24	0.872	0.38	0.984	0.386	2.43	5.61	5.70	0.538
0.070	0.614	0.114	0.716	0.779	1.26	0.863	0.39	0.986	0.395	2.48	5.96	6.04	0.535
0.075	0.632	0.119	0.745	0.816	1.29	0.853	0.40	0.988	0.405	2.54	6.33	6.41	0.531
0.080	0.649	0.123	0.774	0.854	1.31	0.845	0.41	0.989	0.415	2.60	6.72	6.80	0.529
0.085	0.665	0.128	0.803	0.892	1.34	0.836	0.42	0.990	0.424	2.66	7.15	7.22	0.526
0.090	0.681	0.132	0.831	0.929	1.37	0.827	0.43	0.991	0.434	2.73	7.60	7.66	0.523
0.095	0.695	0.137	0.858	0.968	1.39	0.819	0.44	0.992	0.443	2.79	8.07	8.14	0.521
0.10	0.709	0.141	0.886	1.01	1.42	0.810	0.45	0.993	0.453	2.85	8.59	8.64	0.519
0.11	0.735	0.150	0.940	1.08	1.48	0.794	0.46	0.994	0.463	2.91	9.13	9.18	0.517
0.12	0.759	0.158	0.994	1.17	1.54	0.778	0.47	0.995	0.472	2.97	9.71	9.76	0.516
0.13	0.780	0.167	1.05	1.25	1.60	0.762	0.48	0.995	0.482	3.03	10.3	10.4	0.514
0.14	0.800	0.175	1.10	1.33	1.67	0.747	0.49	0.996	0.492	3.09	11.0	11.0	0.513
0.15	0.818	0.183	1.15	1.42	1.74	0.733	0.50	0.996	0.502	3.15	11.7	11.7	0.512
0.16	0.835	0.192	1.20	1.52	1.82	0.718	0.75	1.000	0.746	4.69	54.5	54.5	0.501
0.17	0.850	0.200	1.26	1.61	1.90	0.705	1.0	1.000	0.981	6.16	269.5	269.5	0.500
0.18	0.864	0.208	1.31	1.72	1.99	0.692							
0.20	0.888	0.225	1.41	1.94	2.18	0.668							
0.21	0.899	0.234	1.47	2.05	2.28	0.656							

Wave Calculations

Max Hs	5.80	m		**Pe**	0.000177431
Storm Duration	3.00	hr		**R**	1.930136986
Average T	15.00	s			
N	720.00	waves/storm		**Pe(5)**	6.84932E-05
Probable max wave h	10.52	m			
Lo =	825.932986	m	2709.06019	ft	
d/Lo	d/L	kd	sinh kd	cosh kd	
0.04	0.0833	0.523	0.548	1.14	
0.0429	0.0864	0.5138	0.5709	1.1514	
0.045	0.0888	0.507	0.588	1.16	
L =	409.500967	m	1343.16317		
d =	35.4	m			
H =	12.2	m			
T =	23	sec			
k =	0.01534352				
u =	3.5348665	m/s			
du/dt =	0.96566179	m/s^2			
Cd=	0.65				
D=	2.4384				
Fd=	9902.26	N/m			
	2.23	kips/m			
Fi=	9018.93	N/m			
	2.03	kips/m			
F =	18921.19	N/m			
	4.25	kips/m	1.29684543	kips/ft	
Ftot=	51.89	kips			

Sample Wave Data

Table 4-22. Percent exceedance tables of significant wave height (H_s) for Sites 1 and 2.

Site 1			Site 2		
Instrument: IPS5-060			Instrument: IPS5-092		
2009/08/28 04:59:59 to 2010/07/26 13:17:00			2009/08/29 19:00:00 to 2010/07/28 03:22:45		
# non-flagged Hs records: 3559			# non-flagged Hs records: 3541		
# non-flagged Tp records: 3497			# non-flagged Tp records: 3383		
Hs (m)	**# Exceeding**	**% Exceedance**	**Hs (m)**	**# Exceeding**	**% Exceedance**
0.00	3559	100.00	0.00	3541	100.00
0.25	3344	93.96	0.25	3061	86.44
0.50	3084	86.65	0.50	2662	75.18
0.75	2691	75.61	0.75	2168	61.23
1.00	2093	58.81	1.00	1602	45.24
1.25	1579	44.37	1.25	1114	31.46
1.50	1109	31.16	1.50	734	20.73
1.75	831	23.35	1.75	508	14.35
2.00	642	18.04	2.00	341	9.63
2.25	470	13.21	2.25	219	6.18
2.50	337	9.47	2.50	155	4.38
2.75	240	6.74	2.75	94	2.65
3.00	171	4.80	3.00	48	1.36
3.25	119	3.34	3.25	31	0.88
3.50	78	2.19	3.50	21	0.59
3.75	46	1.29	3.75	15	0.42
4.00	29	0.81	4.00	11	0.31
4.25	25	0.70	4.25	6	0.17
4.50	20	0.56	4.50	1	0.03
4.75	11	0.31	4.75	0	0.00
5.00	8	0.22	5.00	0	0.00
5.25	1	0.03	5.25	0	0.00
5.50	0	0.00	5.50	0	0.00
5.75	0	0.00	5.75	0	0.00
6.00	0	0.00	6.00	0	0.00

Figure 4-23. Percent exceedance plot of significant wave height (H_s) for both sites.

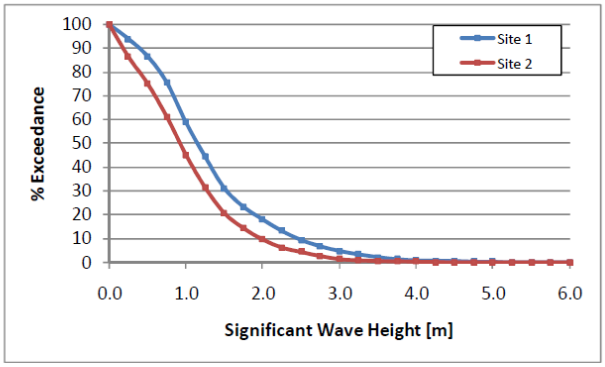

Wind Calculation

$F = 0.00338 V_k^2 C_h C_s A$							
				Wind Velocity, knot	V_k	100	knots
Wind on Column	11.2	k		Height coefficient	C_h	1.1	
Wind on Platform	18.6	k		Shape coedfficient	C_s	1	
				Side Area of column	A_c	300	ft^2
				Side Area of platform	A_p	500	ft^2

Current Sample Data

Table 3-16. Statistical summary of current components and speeds at Site 1 and Site 2 for the entire deployment.

			Annual Statistics (cm/s)												
Site	Depth (m)	chan	min	1%	5%	2%	50%	mean	75%	95%	99%	std	max	# valid	total #
1	Near Surface	Uminor	-33.1	-20.9	-14.3	-5.4	-0.2	0.5	5.7	17.6	29.6	9.6	46.6	20982	20982
		Umajor	-65.4	-46.2	-30.7	-14.9	-6.0	-5.4	3.0	24.1	36.8	16.1	59.0	20982	20982
		Speed	0.0	1.4	3.3	8.2	14.2	16.3	21.8	36.5	51.3	10.7	67.2	20982	20982
	16	Uminor	-32.2	-19.6	-14.3	-5.8	-0.7	0.0	4.7	17.2	28.9	9.4	42.6	20982	20982
		Umajor	-62.2	-45.0	-30.1	-14.2	-6.0	-5.7	2.6	21.0	30.2	14.8	44.2	20982	20982
		Speed	0.1	1.4	3.3	8.2	13.4	15.6	20.9	34.0	47.0	9.9	64.2	20982	20982
	26	Uminor	-27.3	-17.4	-12.6	-5.8	-1.5	-0.7	3.3	14.3	26.2	8.2	46.1	20982	20982
		Umajor	-57.8	-43.1	-27.8	-13.0	-5.8	-5.6	1.7	18.8	28.3	13.6	37.2	20982	20982
		Speed	0.0	1.5	3.4	7.8	12.2	14.2	18.6	31.4	44.4	9.0	58.9	20982	20982
2	Near Surface	Uminor	-38.2	-21.2	-14.3	-7.4	-3.1	-2.8	0.8	10.0	24.3	7.9	53.3	35220	35220
		Umajor	-85.0	-59.7	-41.5	-23.0	-12.3	-7.8	1.9	45.0	62.2	25.2	93.5	35220	35220
		Speed	0.0	2.2	5.0	12.3	20.3	23.3	30.9	53.7	67.2	14.8	99.0	35220	35220
	22	Uminor	-40.6	-22.9	-16.6	-8.8	-4.6	-4.4	-0.7	8.3	21.5	7.9	49.3	35220	35220
		Umajor	-83.8	-58.5	-41.6	-23.1	-13.3	-9.0	0.6	41.5	57.1	23.6	84.6	35220	35220
		Speed	0.1	2.7	5.7	13.5	20.5	23.1	29.7	50.3	63.9	13.6	90.4	35220	35220
	34	Uminor	-39.9	-23.9	-16.7	-9.4	-5.7	-5.3	-2.0	8.5	19.7	7.7	35.4	35220	35220
		Umajor	-78.1	-53.8	-40.3	-23.1	-13.2	-9.2	0.6	36.7	50.9	22.0	83.7	35220	35220
		Speed	0.1	2.6	5.8	13.9	20.6	22.4	28.6	46.7	57.9	12.3	84.5	35220	35220

Table 3-17. Summary of ocean current quarterly statistics for Site 1 at the near-surface.

Site 1: Near Surface	chan	min	1%	5%	25%	50%	mean	75%	95%	99%	std	max	# valid	total #
Time	cm/s													
26-Jul-2010	Uminor	-27.8	-21.0	-15.8	-8.4	-2.8	-2.3	3.2	13.2	21.1	8.9	34.0	6372	6372
-	Umajor	-42.7	-33.4	-24.2	-15.3	-9.7	-8.8	-2.6	8.7	16.8	10.1	31.6	6372	6372
30-Sep-2010	Speed	0.2	2.0	4.3	9.8	14.3	14.7	18.7	27.0	35.2	6.9	42.8	6372	6372
01-Oct-2010	Uminor	-33.1	-22.4	-15.4	-5.3	0.7	1.7	7.8	22.5	33.1	11.1	46.6	8832	8832
-	Umajor	-54.6	-38.6	-28.2	-10.5	0.2	0.8	12.2	30.6	41.3	17.6	59.0	8832	8832
31-Dec-2010	Speed	0.1	1.6	3.8	8.9	15.9	17.8	25.2	37.7	48.5	10.9	61.4	8832	8832
01-Jan-2011	Uminor	-18.3	-13.0	-8.4	-2.5	0.7	1.7	5.0	15.4	24.1	7.1	32.6	5777	5777
-	Umajor	-65.4	-56.1	-41.2	-20.1	-7.7	-11.0	-2.0	11.2	27.8	15.9	51.4	5777	5777
02-Mar-2011	Speed	0.0	1.0	2.3	5.9	11.2	15.8	22.6	44.5	58.8	13.3	67.2	5777	5777

Table 3-18. Summary of ocean current quarterly statistics for Site 1 at mid-depth (16 m).

Site 1: 16 m	chan	min	1%	5%	25%	50%	mean	75%	95%	99%	std	max	# valid	total #
Time	cm/s													
26-Jul-2010	Uminor	-29.5	-20.7	-16.2	-9.3	-3.9	-3.1	2.4	12.5	19.8	8.8	33.4	6371	6371
-	Umajor	-47.9	-34.9	-24.7	-14.3	-8.5	-8.3	-2.0	8.5	14.1	9.9	21.7	6371	6371
30-Sep-2010	Speed	0.4	2.1	4.6	9.2	13.4	14.3	18.4	27.0	36.1	7.0	48.8	6371	6371
01-Oct-2010	Uminor	-32.2	-20.3	-14.5	-5.4	0.3	1.5	7.1	22.6	32.6	10.8	42.6	8832	8832
-	Umajor	-51.4	-35.6	-26.7	-10.5	-1.0	-0.3	10.2	26.2	32.4	15.7	41.7	8832	8832
31-Dec-2010	Speed	0.2	1.6	3.7	8.9	14.9	16.5	23.2	33.7	41.4	9.5	52.0	8832	8832
01-Jan-2011	Uminor	-17.8	-11.6	-7.7	-2.9	0.1	1.0	3.9	14.0	22.0	6.4	29.8	5779	5779
-	Umajor	-62.2	-53.1	-40.3	-19.8	-8.3	-11.2	-2.5	10.9	24.5	15.2	44.2	5779	5779
02-Mar-2011	Speed	0.1	1.1	2.5	6.1	11.0	15.4	21.8	42.3	56.4	12.6	64.2	5779	5779

Table 3-19. Summary of ocean current quarterly statistics for Site 1 at near-bottom (26 m).

Site 1: 26 m	chan	min	1%	5%	25%	50%	mean	75%	95%	99%	std	max	# valid	total #
Time	cm/s													
26-Jul-2010	Uminor	-23.9	-16.6	-13.6	-8.0	-3.8	-3.3	0.5	9.7	15.8	6.9	22.2	6371	6371
-	Umajor	-34.8	-29.4	-21.2	-12.6	-7.5	-7.3	-2.3	7.8	13.4	8.6	21.5	6371	6371
30-Sep-2010	Speed	0.1	2.1	4.3	8.3	11.6	12.3	15.4	22.3	32.2	5.8	38.1	6371	6371
01-Oct-2010	Uminor	-27.3	-19.2	-13.9	-5.5	0.0	1.0	6.4	19.1	30.1	9.9	46.1	8832	8832
-	Umajor	-53.6	-34.2	-25.2	-9.8	-1.5	-0.8	8.4	24.4	29.9	14.5	37.2	8832	8832
31-Dec-2010	Speed	0.0	1.6	3.6	8.4	13.6	15.3	21.2	31.1	39.6	8.8	54.1	8832	8832
01-Jan-2011	Uminor	-17.7	-11.2	-8.0	-3.8	-1.1	-0.4	2.0	11.2	17.4	5.6	24.2	5779	5779
-	Umajor	-57.8	-50.5	-37.8	-19.3	-8.5	-11.0	-2.8	10.3	23.0	14.1	37.1	5779	5779
02-Mar-2011	Speed	0.1	1.2	2.6	6.3	10.9	14.8	20.9	38.9	51.9	11.5	58.9	5779	5779

Table 3-20. Summary of ocean current quarterly statistics for Site 2 at the near-surface.

Site 2: Near Surface	chan	min	1%	5%	25%	50%	mean	75%	95%	99%	std	max	# valid	total #
Time	cm/s													
28-Jul-2010	Uminor	-32.9	-24.0	-18.2	-10.1	-5.5	-5.6	-0.8	6.4	12.5	7.4	24.3	6215	6215
-	Umajor	-61.7	-53.0	-45.1	-32.9	-24.3	-22.3	-12.6	5.4	12.7	15.0	20.2	6215	6215
30-Sep-2010	Speed	0.4	2.7	6.8	17.5	26.0	25.9	34.1	45.5	53.5	11.7	65.0	6215	6215
01-Oct-2010	Uminor	-25.8	-19.9	-14.9	-8.2	-3.5	-2.0	2.2	17.2	33.7	9.9	53.3	8832	8832
-	Umajor	-65.4	-58.6	-44.0	-17.9	2.5	6.0	33.4	58.5	67.1	31.9	76.9	8832	8832
31-Dec-2010	Speed	0.2	2.8	5.7	13.2	26.0	29.0	42.8	60.7	68.6	17.8	79.4	8832	8832
01-Jan-2011	Uminor	-38.2	-23.8	-9.0	-3.6	-0.8	-0.8	1.7	7.8	24.4	6.7	38.7	8640	8640
-	Umajor	-85.0	-70.7	-51.1	-21.9	-12.6	-13.5	-5.3	22.1	63.8	21.7	93.5	8640	8640
31-Mar-2011	Speed	0.0	1.5	3.5	8.5	15.2	20.3	26.4	58.8	79.1	16.8	99.0	8640	8640
01-Apr-2011	Uminor	-24.0	-15.1	-11.7	-6.6	-3.0	-2.3	0.7	10.2	17.7	6.7	35.5	8736	8736
-	Umajor	-38.8	-32.0	-24.8	-17.0	-9.4	-2.0	12.9	37.4	53.2	20.3	72.8	8736	8736
30-Jun-2011	Speed	0.5	2.7	5.7	12.3	17.6	19.0	23.5	38.1	53.8	10.1	72.9	8736	8736
01-Jul-2011	Uminor	-22.5	-17.6	-14.8	-10.4	-7.1	-7.0	-3.8	1.2	5.5	4.9	13.4	2796	2796
-	Umajor	-55.1	-41.9	-35.3	-26.1	-19.9	-19.8	-13.2	-4.4	-0.1	9.5	4.3	2796	2796
30-Jul-2011	Speed	1.0	4.2	8.5	16.1	21.6	22.0	27.5	36.1	42.7	8.5	56.4	2796	2796

Table 3-21. Summary of ocean current quarterly statistics for Site 2 at mid-depth (22 m).

Site 2: 22 m	chan	min	1%	5%	25%	50%	mean	75%	95%	99%	std	max	# valid	total #
Time	cm/s													
28-Jul-2010	Uminor	-36.1	-24.4	-19.8	-11.5	-7.0	-7.2	-3.0	4.8	13.9	7.4	25.5	6215	6215
-	Umajor	-74.0	-54.2	-44.5	-31.2	-23.9	-22.5	-14.4	3.3	9.6	13.7	20.3	6215	6215
30-Sep-2010	Speed	0.4	6.1	10.8	19.4	25.7	26.4	32.4	45.3	54.8	10.3	76.6	6215	6215
01-Oct-2010	Uminor	-32.6	-24.2	-18.2	-9.4	-4.5	-3.6	0.8	15.7	29.3	10.1	49.3	8832	8832
-	Umajor	-61.1	-55.2	-43.9	-18.9	0.9	3.3	26.8	53.6	61.2	30.0	69.4	8832	8832
31-Dec-2010	Speed	0.3	2.5	5.8	15.0	25.7	27.8	40.4	55.9	62.3	15.8	71.1	8832	8832
01-Jan-2011	Uminor	-40.6	-23.3	-10.0	-4.4	-1.8	-1.7	0.4	7.2	25.0	6.7	35.0	8640	8640
-	Umajor	-83.8	-69.5	-50.8	-22.7	-13.6	-14.6	-6.3	19.7	56.5	20.8	84.6	8640	8640
31-Mar-2011	Speed	0.1	1.7	4.0	9.6	16.1	20.8	26.4	57.4	76.4	16.1	90.4	8640	8640
01-Apr-2011	Uminor	-26.3	-17.7	-13.5	-8.4	-5.1	-4.6	-1.6	7.0	11.7	6.1	27.3	8736	8736
-	Umajor	-39.0	-31.2	-25.4	-17.6	-10.3	-3.3	10.7	34.9	49.8	19.2	62.6	8736	8736
30-Jun-2011	Speed	0.7	3.1	5.9	13.0	17.7	18.8	23.1	36.3	51.1	9.3	64.0	8736	8736
01-Jul-2011	Uminor	-27.0	-20.2	-16.8	-12.1	-9.0	-8.9	-5.8	-0.6	4.0	5.0	7.7	2797	2797
-	Umajor	-51.7	-37.0	-33.2	-24.8	-18.2	-18.4	-11.9	-3.8	0.2	9.0	4.7	2797	2797
30-Jul-2011	Speed	4.4	7.1	9.6	16.0	21.2	21.6	26.8	34.2	37.8	7.6	51.9	2797	2797

Table 3-22. Summary of ocean current quarterly statistics for Site 2 at the near-bottom (34 m).

Site 2: 34 m	chan	min	1%	5%	25%	50%	mean	75%	95%	99%	std	max	# valid	total #
Time	cm/s													
28-Jul-2010	Uminor	-28.3	-20.8	-17.4	-11.3	-7.7	-7.8	-4.3	1.7	8.7	5.8	23.3	6215	6215
-	Umajor	-53.3	-46.7	-38.6	-28.4	-22.4	-20.3	-13.0	4.0	9.0	12.4	13.2	6215	6215
30-Sep-2010	Speed	0.4	6.2	10.5	18.2	23.9	24.2	29.5	39.2	47.0	8.6	53.5	6215	6215
01-Oct-2010	Uminor	-39.2	-28.5	-21.2	-9.6	-4.8	-4.1	1.7	14.7	25.7	10.5	35.4	8832	8832
-	Umajor	-59.8	-53.2	-44.4	-19.4	1.4	2.2	25.4	47.3	55.3	28.1	64.6	8832	8832
31-Dec-2010	Speed	0.1	2.6	5.6	14.7	25.9	26.7	37.6	51.1	57.0	14.5	65.3	8832	8832
01-Jan-2011	Uminor	-39.9	-23.1	-11.4	-6.5	-3.8	-3.2	-1.0	7.9	22.3	6.7	34.6	8640	8640
-	Umajor	-78.1	-64.1	-49.4	-21.5	-13.4	-14.5	-6.4	18.4	52.5	19.6	83.7	8640	8640
31-Mar-2011	Speed	0.1	1.6	4.0	10.0	16.3	20.6	26.3	52.6	69.2	15.0	84.5	8640	8640
01-Apr-2011	Uminor	-26.4	-19.2	-14.3	-9.4	-6.2	-5.5	-2.6	6.5	12.7	6.2	25.9	8736	8736
-	Umajor	-38.3	-31.7	-26.3	-18.2	-10.7	-4.5	8.8	32.0	44.0	18.4	54.4	8736	8736
30-Jun-2011	Speed	0.5	3.1	6.1	13.5	18.4	18.9	23.5	34.6	44.6	8.4	55.3	8736	8736
01-Jul-2011	Uminor	-21.5	-18.5	-16.1	-12.1	-9.0	-9.3	-6.6	-2.9	-0.1	4.1	4.4	2797	2797
-	Umajor	-38.3	-35.0	-31.9	-25.1	-19.7	-18.7	-12.7	-2.9	1.2	8.7	4.5	2797	2797
30-Jul-2011	Speed	4.1	8.5	12.1	17.6	22.1	22.1	26.6	32.4	35.2	6.2	38.9	2797	2797

Current Calculations Page:

Average Percent Exceed site 1	99%	95%	75%	50%	25%	5%	1%		
Near Surface	0.05	0.10	0.25	0.42	0.67	1.14	1.51		
52.48	0.04	0.11	0.26	0.41	0.61	0.99	1.31		
85.28	0.05	0.11	0.26	0.39	0.56	0.90	1.20		
site 1	index	Max, m/s	rage max, m/s		Design Velocity				
Near surface	1	0.88	0.687425	2.254754		1.21	m/s	4	ft/s
16m	16	0.723	0.593325	1.946106					
26m	26	0.589	0.51375	1.6851					
Cyllinder area	42.0624								
Small truss member length	312.7248								
Small truss area									
4" dia	31.77284								
6" dia	47.65926								
10" da	79.4321								
Large truss member length	179.9539								
Large member area									
8"	36.56664								
10"	45.7083								
12"	91.41659								
Truss area		Small			Total area, m^2				
		31.77283968	47.65926	79.4321					
Large	36.56664	68.33947622	84.2259	115.9987		110.4019	126.2883	158.0611	
	45.7083	77.48113536	93.36756	125.1404		119.5435	135.43	167.2028	
	91.41659	123.189431	139.0759	170.8487		165.2518	181.1383	212.9111	
Total Force	N				kips				
	52532.8	60092.07564	75210.63		11.80985	13.50924	16.90803		
	56882.7	64441.97416	79560.52		12.78774	14.48714	17.88592		
	78632.19	86191.46676	101310		17.67722	19.37662	22.7754		

Ice Sample Data

4.3 ESTIMATION OF EXTREME KEELS DRAFTS

4.3.1 EXTREME ICE KEELS

The 10 largest keels observed at Site 1 and Site 2 are listed in Table 4-12 and Table 4-13. At Site 1, the maximum depths of the listed exceptional keels ranged from 21.51 to 26.67 m. At Site 2, the maximum keel depths ranged from 21.91 to 29.96 m. Overall, 19 keels at Site 1 and 24 keels at Site 2 were observed with depths in excess of 20 m.

Table 4-12. List of keels with the ten largest drafts observed at Site 1. The draft values are provided as the maximum and mean (average) draft computed for each of the 10 largest individual ice keels.

Site 1 *Draft statistics after March 2, 2011 calculated from pseudo-spatial series		
Date/ Time	**Max Draft (m)**	**Mean Draft (m)**
02-Jun-2011 22:02:43*	22.16	14.37
02-Jun-2011 21:53:41*	21.76	12.01
30-May-2011 13:24:42*	20.54	16.21
03-May-2011 11:31:51*	20.17	14.73
10-Apr-2011 05:02:30*	19.41	16.06
02-Jun-2011 22:26:00*	19.25	11.13
22-May-2011 04:58:58*	18.33	12.48
02-Jun-2011 20:26:11*	18.26	13.13
02-Jun-2011 21:21:23*	18.10	14.36
24-Feb-2011 03:15:54	18.03	13.66

4.3.4 STATISTICAL ANALYSIS

The distributions of maximum keel draft values in 2010-2011 for keels with maximum drafts above the 13 m threshold are presented in Table 4-14 for Site 1 and Site 2.

Table 4-14. Ice draft distributions in 2010-2011 for ice keels exceeding 13.0 m maximum draft. Draft statistics for Site 1 calculated from pseudo-spatial series after March 2, 2011.

	Number of Keels	
Draft (m)	Site 1	Site 2
13.0 - 13.5	32	63
13.5 - 14.0	32	73
14.0 - 14.5	17	46
14.5 - 15.0	15	36
15.0 - 15.5	14	30
15.5 - 16.0	7	13
16.0 - 16.5	5	18
16.5 - 17.0	5	14
17.0 - 17.5	3	10
17.5 - 18.0	0	8
18.0 - 18.5	4	7
18.5 - 19.0	0	7
19.0 - 19.5	2	1
19.5 - 20.0	0	4
20.0 - 20.5	1	2
20.5 - 21.0	1	3
21.0 - 21.5	0	1
21.5 - 22.0	1	1
22.0 - 22.5	1	1
22.5 - 23.0	-	1
23.0 - 23.5	-	1
23.5 - 24.0	-	0
24.0 – 24.5	-	1
24.5 – 25.0	-	0
25.0 – 25.5	-	0
25.5 – 26.0	-	0
26.0 – 26.5	-	0
26.5 – 27.0	-	0
27.0 – 27.5	-	0
27.5 – 28.0	-	0
28.0 – 28.5	-	0
28.5 – 29.0	-	1

Appendix B: Superstructure

Selected design alternative for the superstructure.

Appendix C: Substructure

Trusses

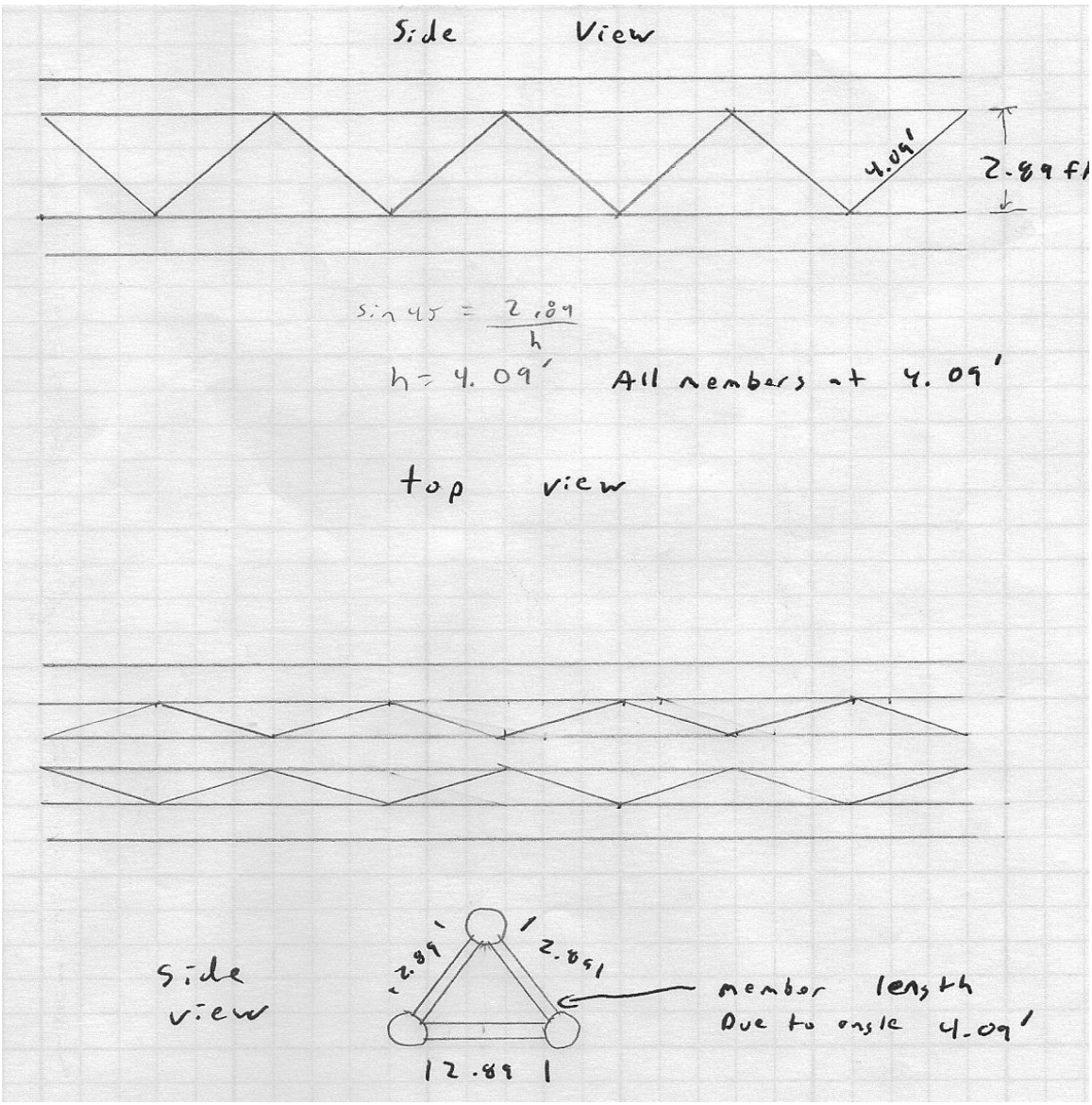

Substructure Dimensions

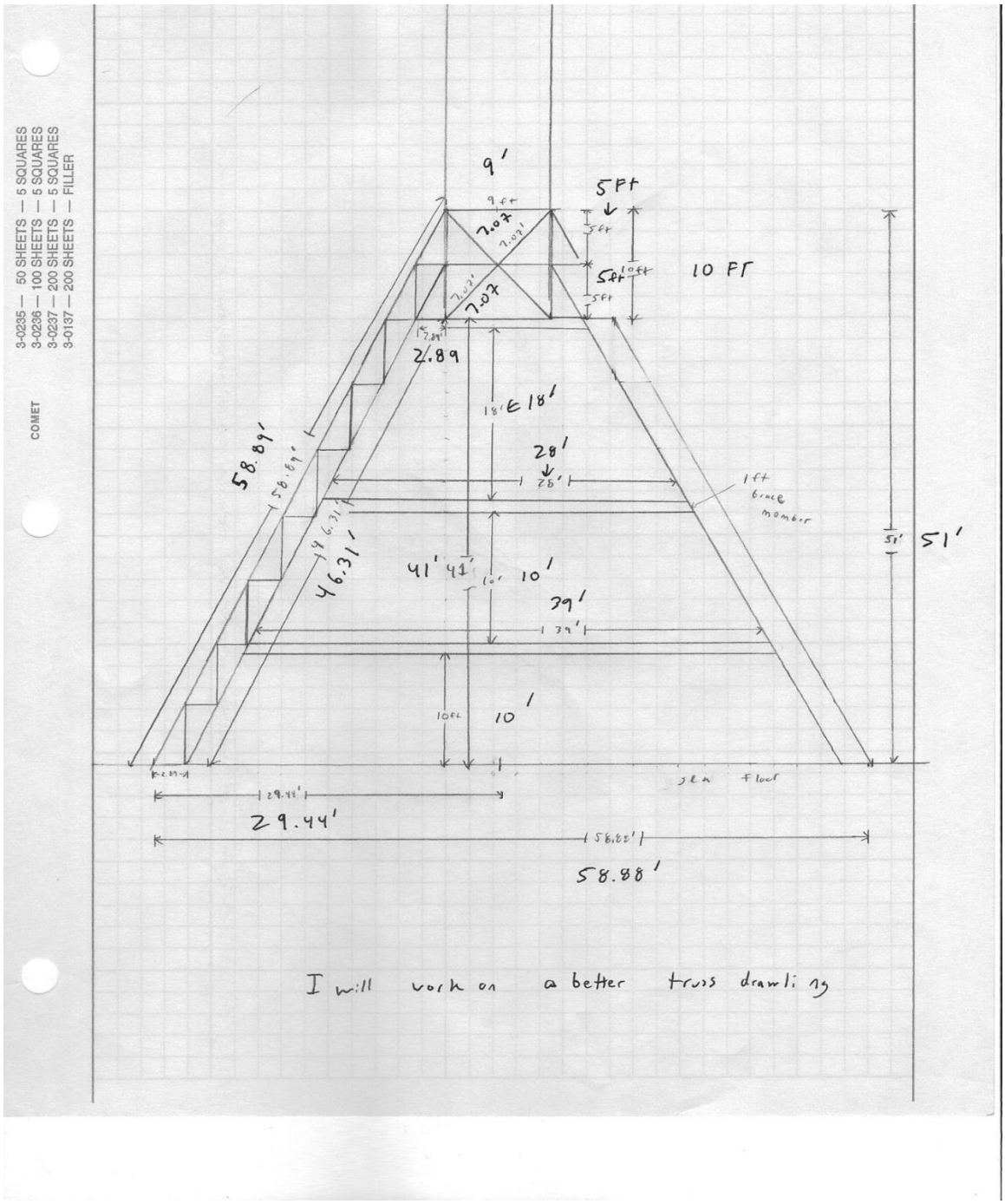

Top View of Substructure

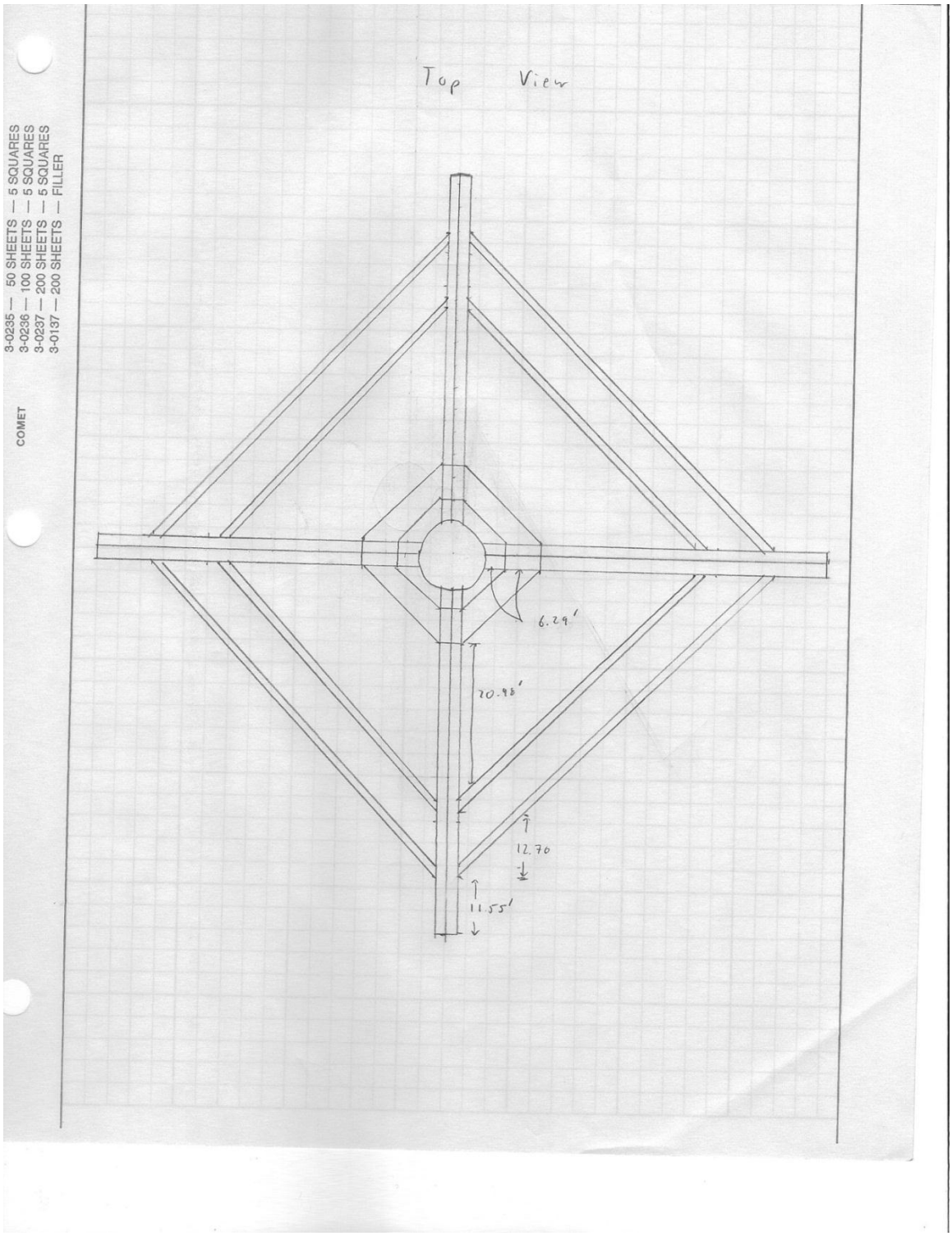

Moment Calculation

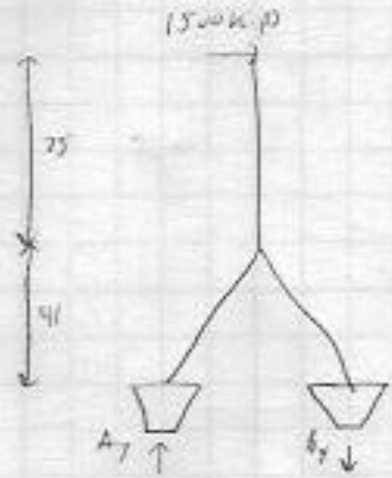

$M_A = 1500(116) + 58.52(B_y)$

$B_y = -2955.16$ kips ↓

$A_y = 2955.16$ kips ↑

$A_y + B_y = 0$

$A_y = -B_y$

Substructure Alternative 1

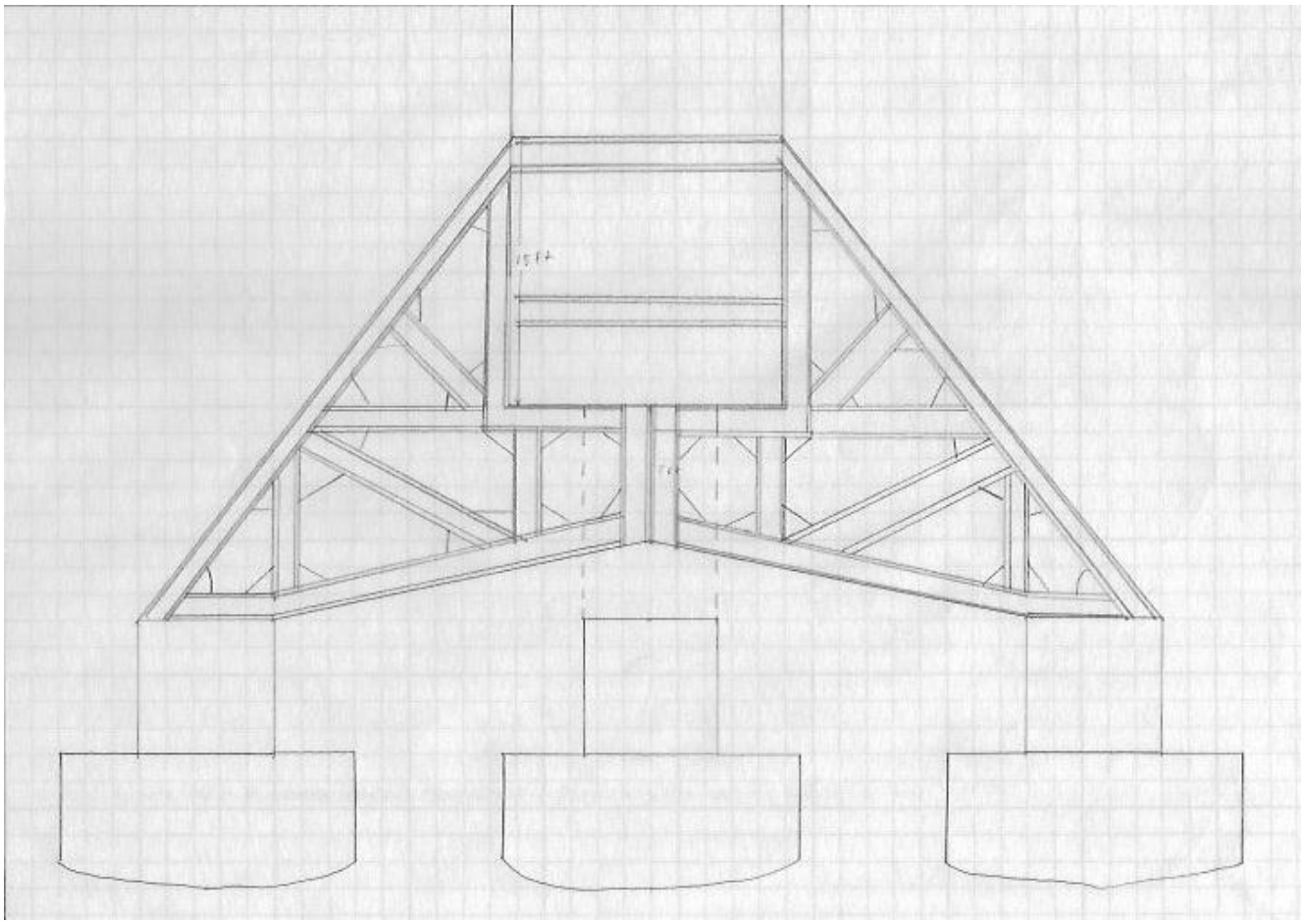

Alternative 2 for substructure

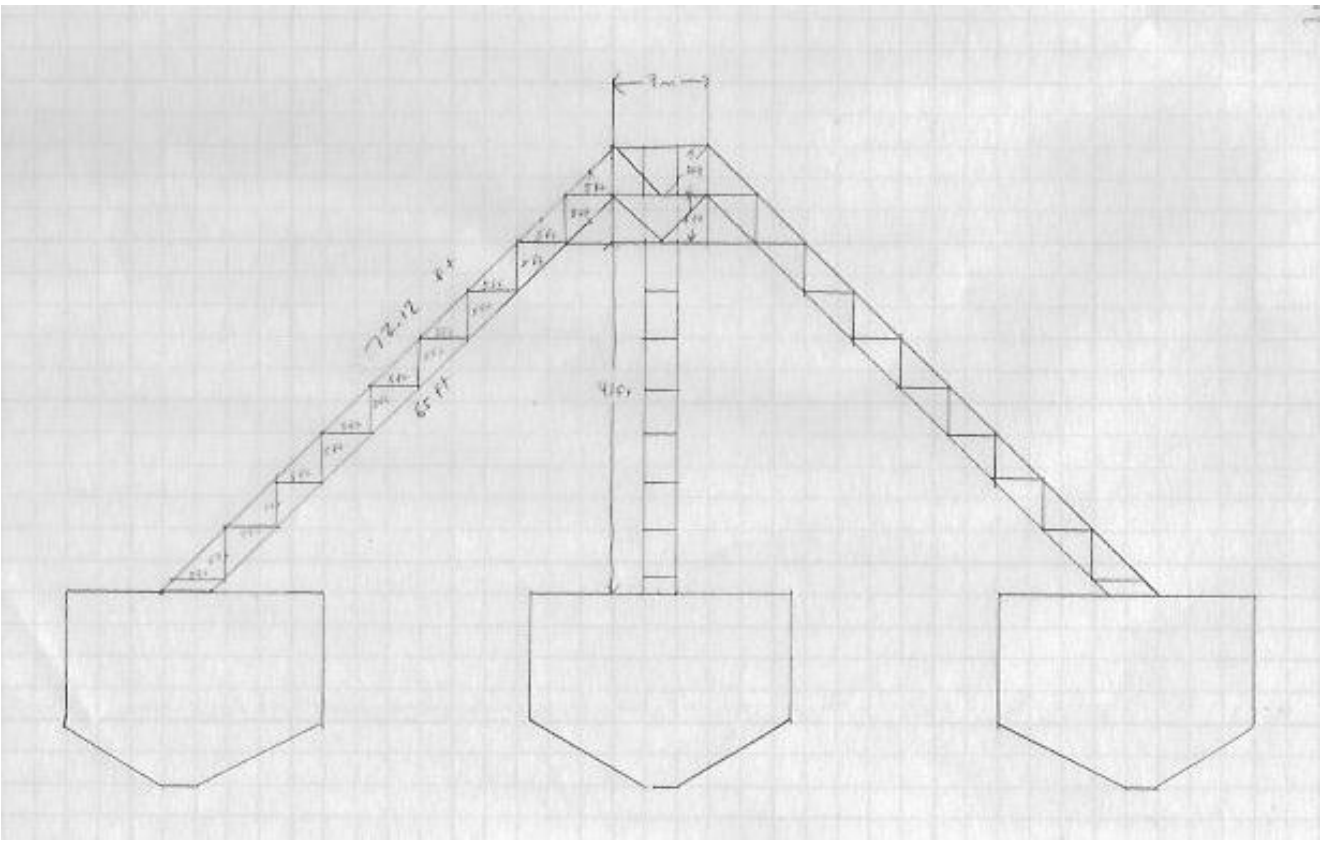

Chukchi Sea Weather Monitoring Station

University of Alaska Anchorage
Civil Engineering Senior Design Course
Spring 2012

Jaime Bronga
Robert Halcomb
Phillip Hearn
David Hoisington
Tim Samuelson
Chris Wiehe

UAA School of Engineering
UNIVERSITY of ALASKA ANCHORAGE

Chukchi Sea Weather Monitoring Station

DRAWN BY: Phillip Hearn

Plan Set Cover Page

STATE	YEAR
ALASKA	2012
SHEET NUMBER	TOTAL SHEETS
1	25

Chukchi Sea Weather Monitoring Station

DRAWN BY: Philip Heam

Structure

YEAR	TOTAL SHEETS
2012	25
STATE	SHEET NUMBER
ALASKA	2

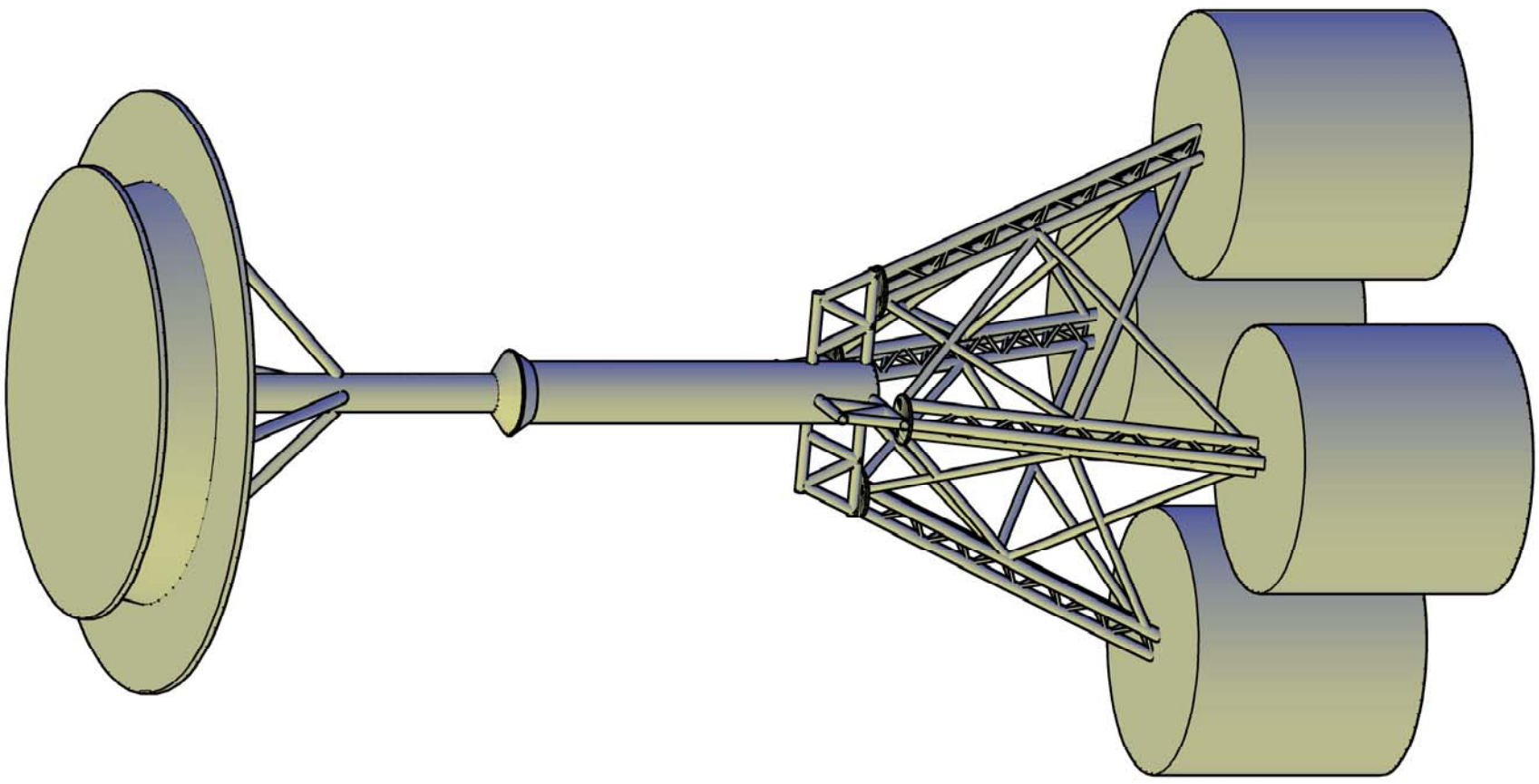

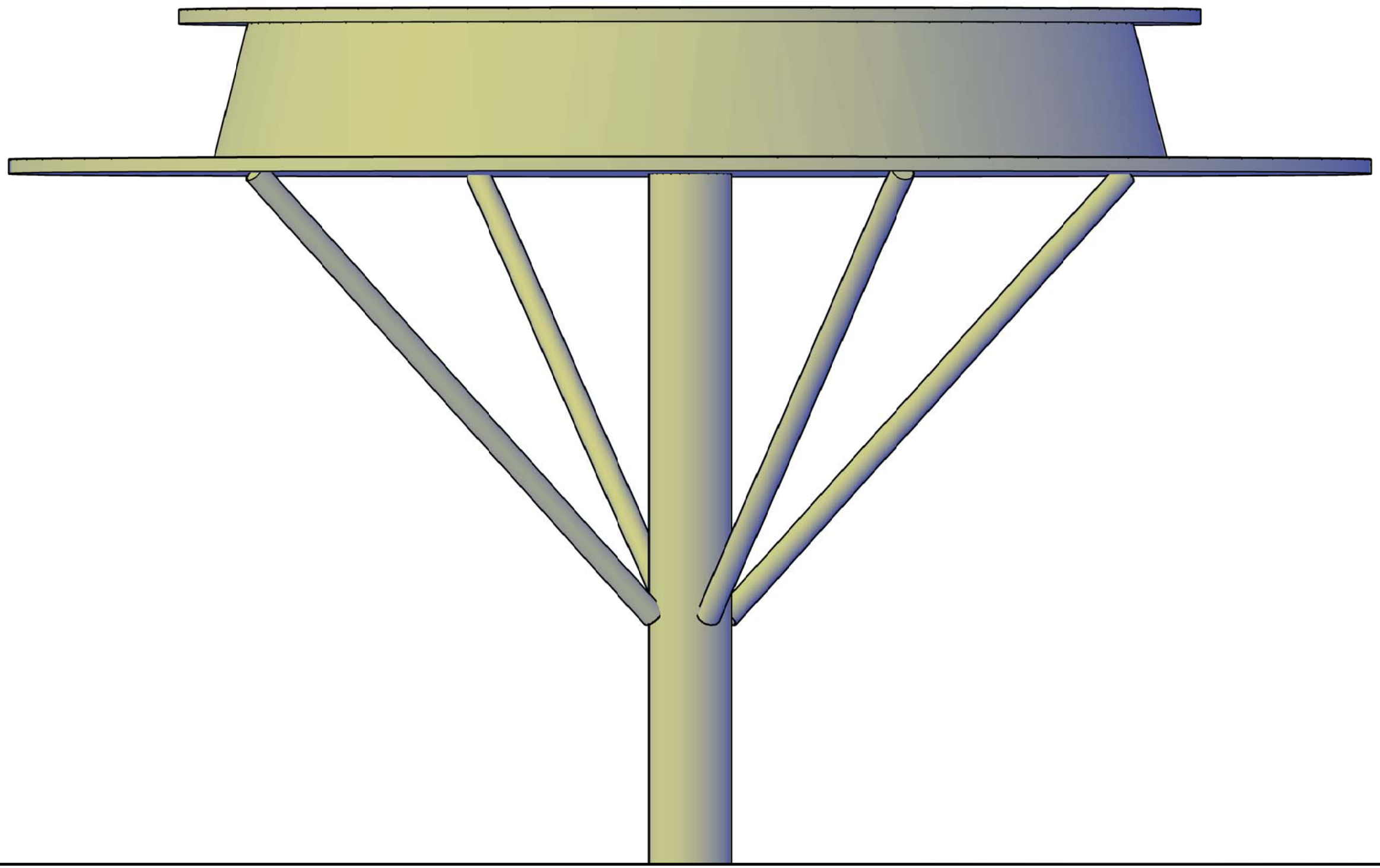

Chukchi Sea Weather Monitoring Station

DRAWN BY: Phillip Hearn

Platform

STATE	YEAR
ALASKA	2012
SHEET NUMBER	TOTAL SHEETS
3	25

Chukchi Sea Weather Monitoring Station

DRAWN BY: Philip Hearn

Platform bracing to column connection

YEAR	TOTAL SHEETS
2012	25
STATE	SHEET NUMBER
ALASKA	4

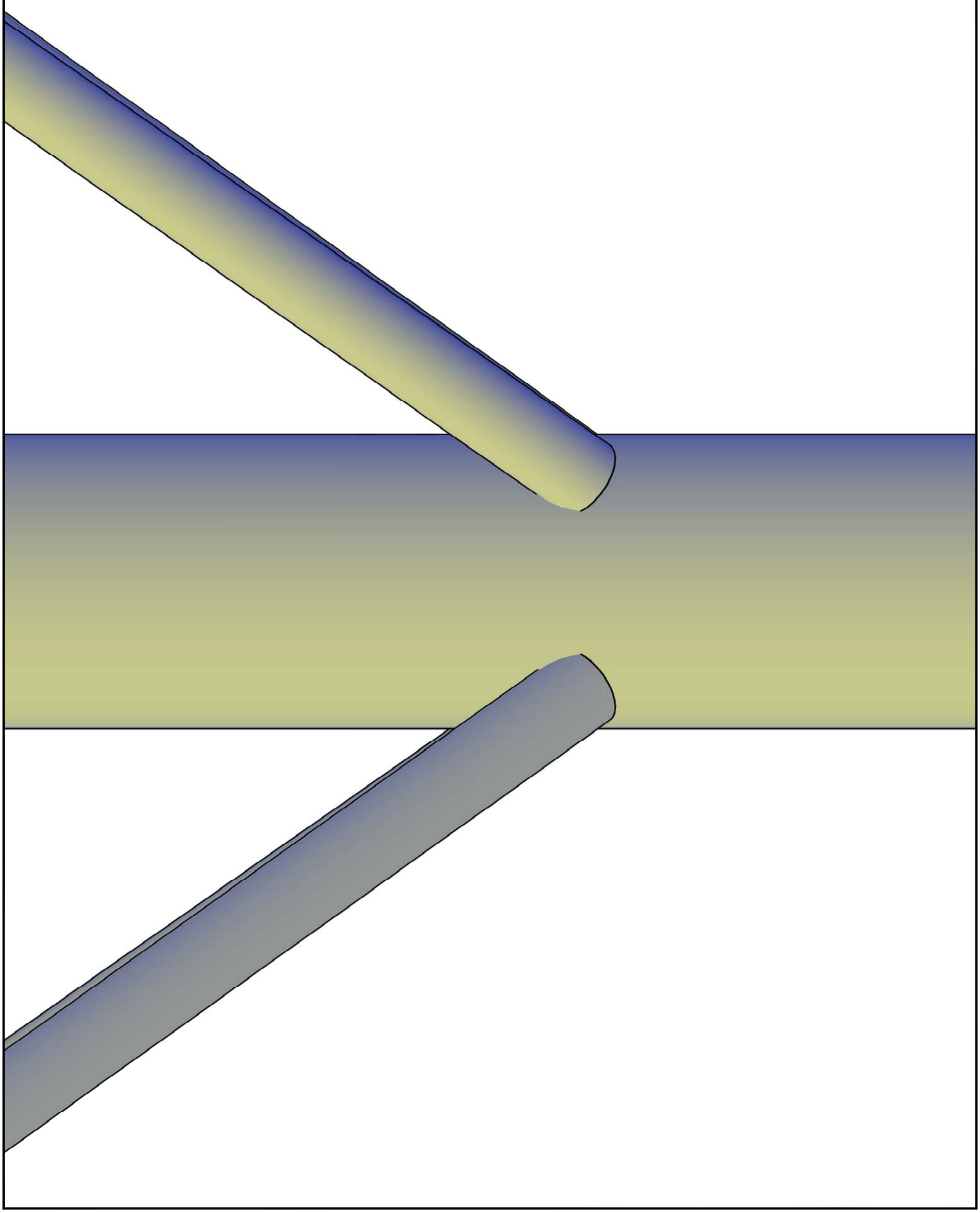

Chukchi Sea Weather Monitoring Station

DRAWN BY: Philip Hearn

Superstructure

YEAR	TOTAL SHEETS
2012	25

STATE	SHEET NUMBER
ALASKA	5

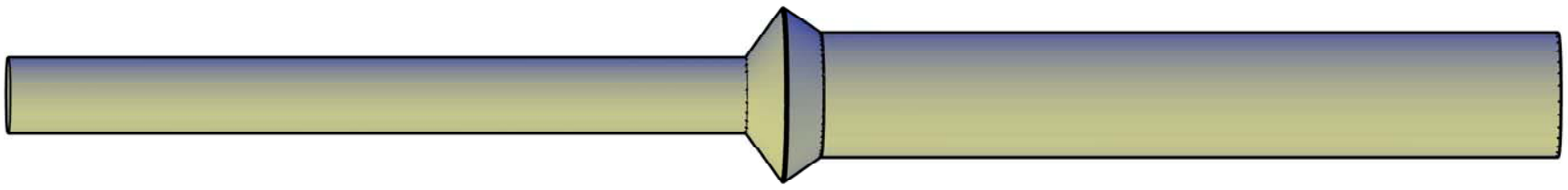

Chukchi Sea Weather Monitoring Station

DRAWN BY: Philip Hearn

Ice disk

YEAR	TOTAL SHEETS
2012	25

STATE	SHEET NUMBER
ALASKA	6

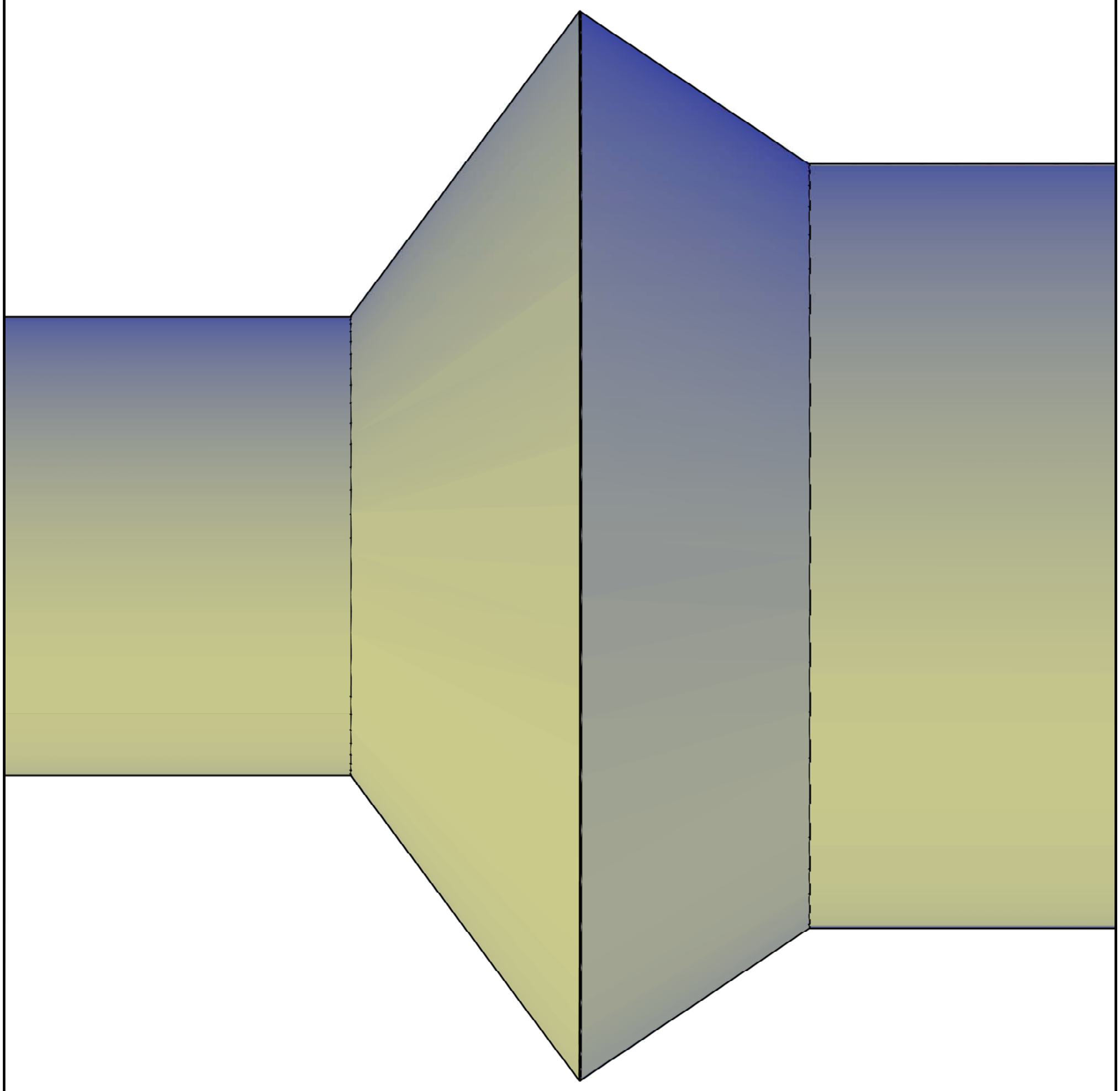

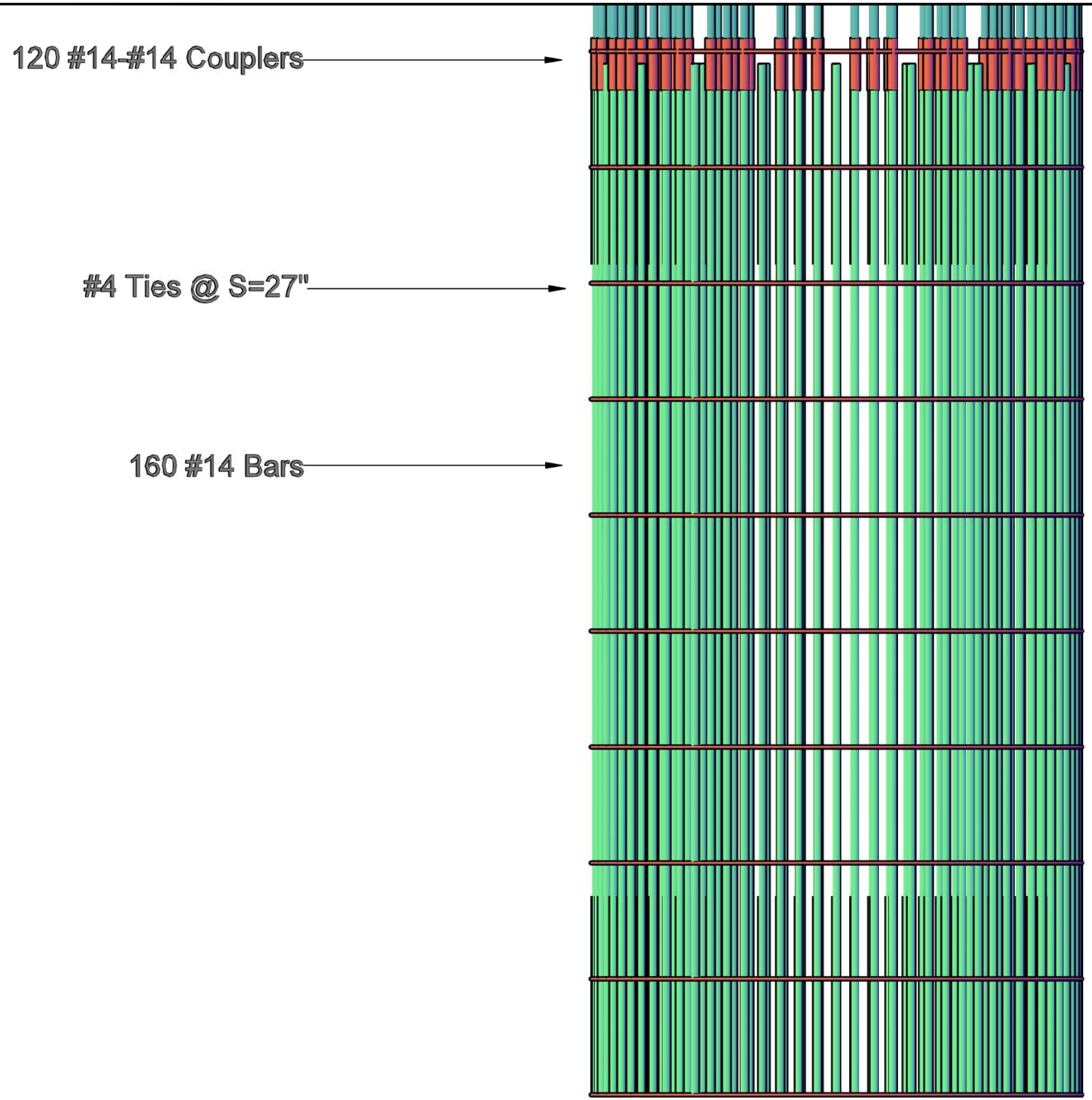

Chukchi Sea Weather Monitoring Station

DRAWN BY: Philip Hearn

0'-20' Reinforcement

STATE	YEAR
ALASKA	2012
SHEET NUMBER	TOTAL SHEETS
7	25

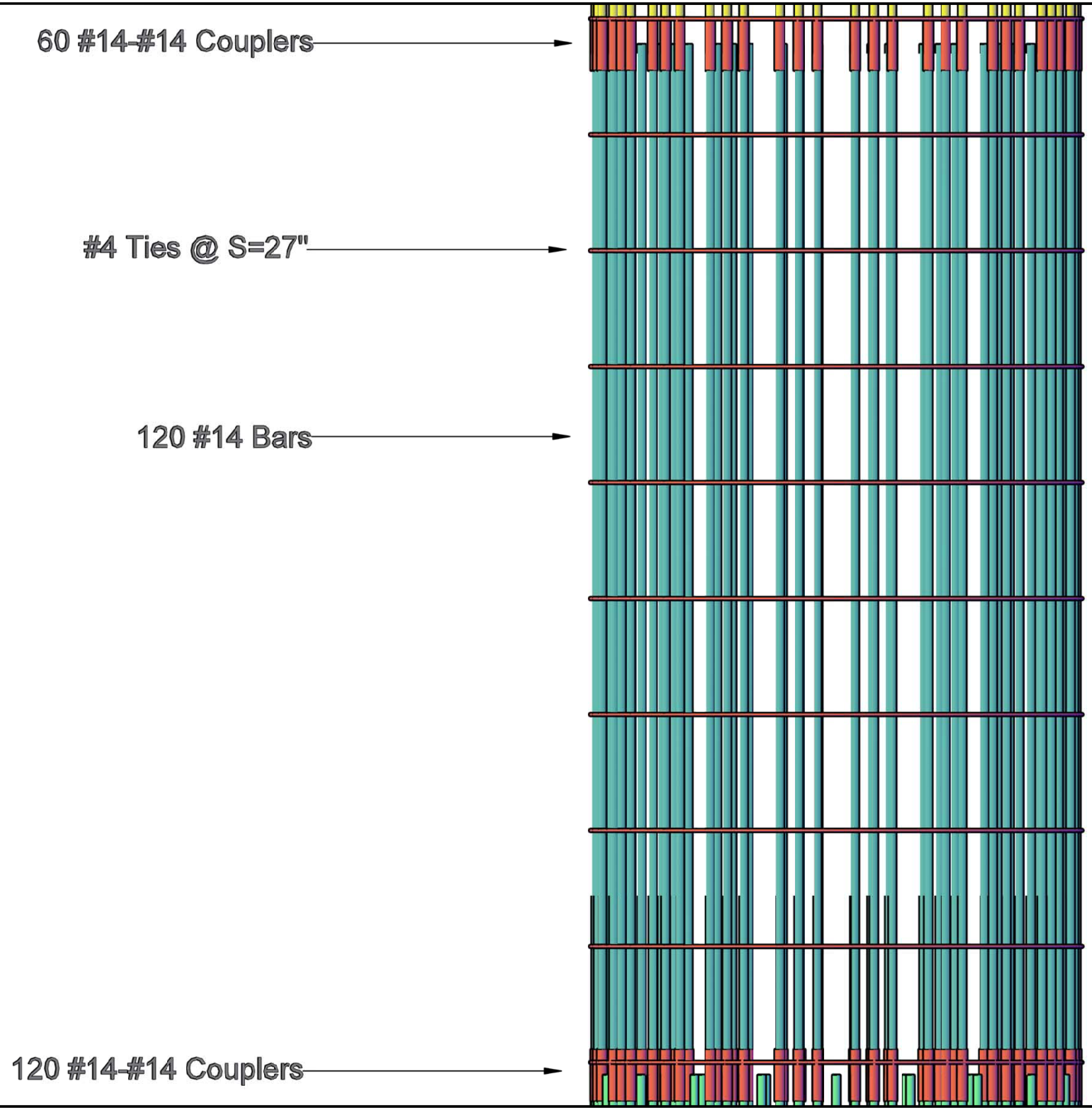

Chukchi Sea Weather Monitoring Station

DRAWN BY: David Holsington

20'-40' Reinforcement

STATE	YEAR
ALASKA	2012
SHEET NUMBER	TOTAL SHEETS
8	25

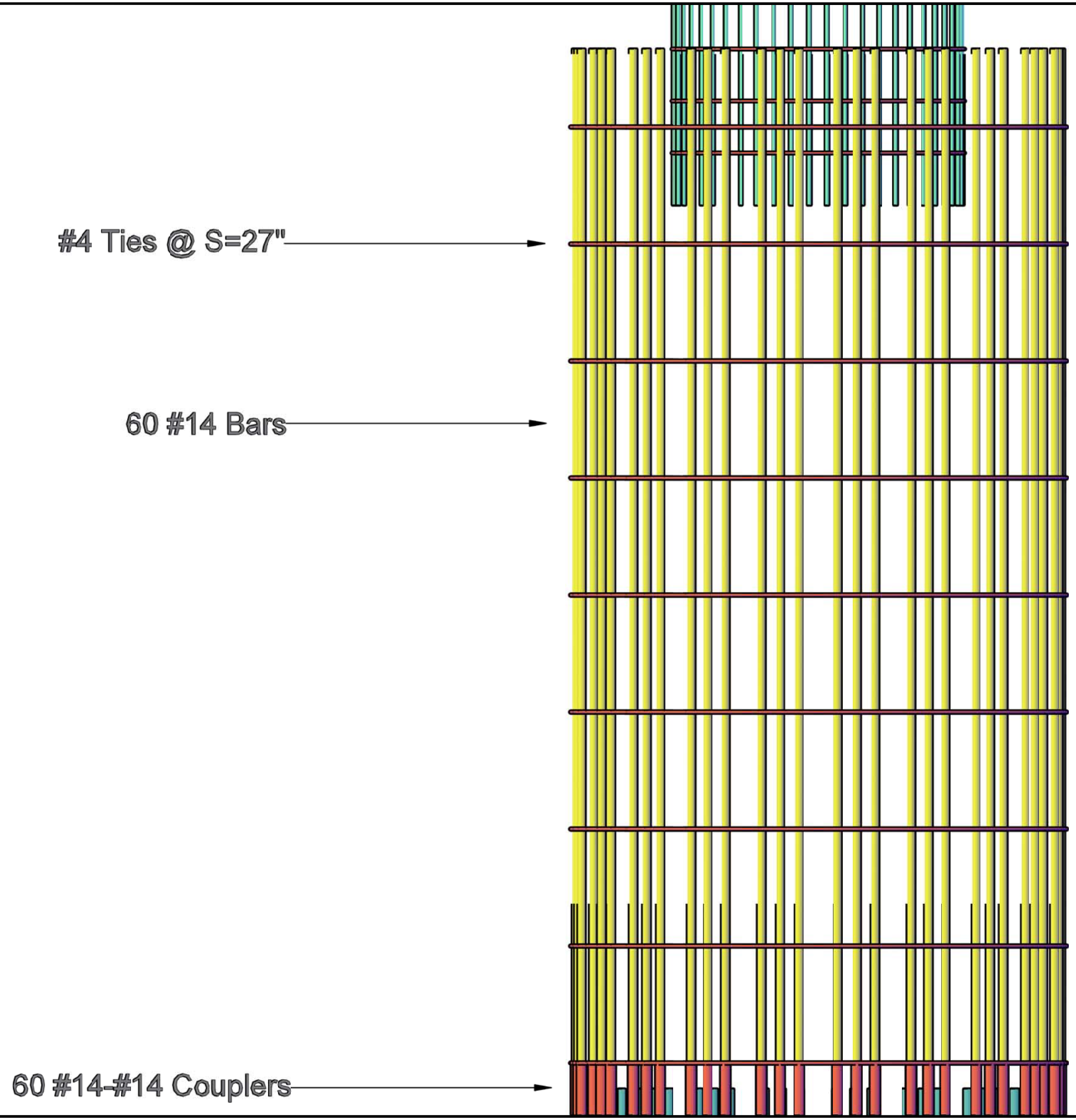

Chukchi Sea Weather Monitoring Station

DRAWN BY: Phillip Hearn

40'60' Reinforcement

STATE	YEAR
ALASKA	2012
SHEET NUMBER	TOTAL SHEETS
9	25

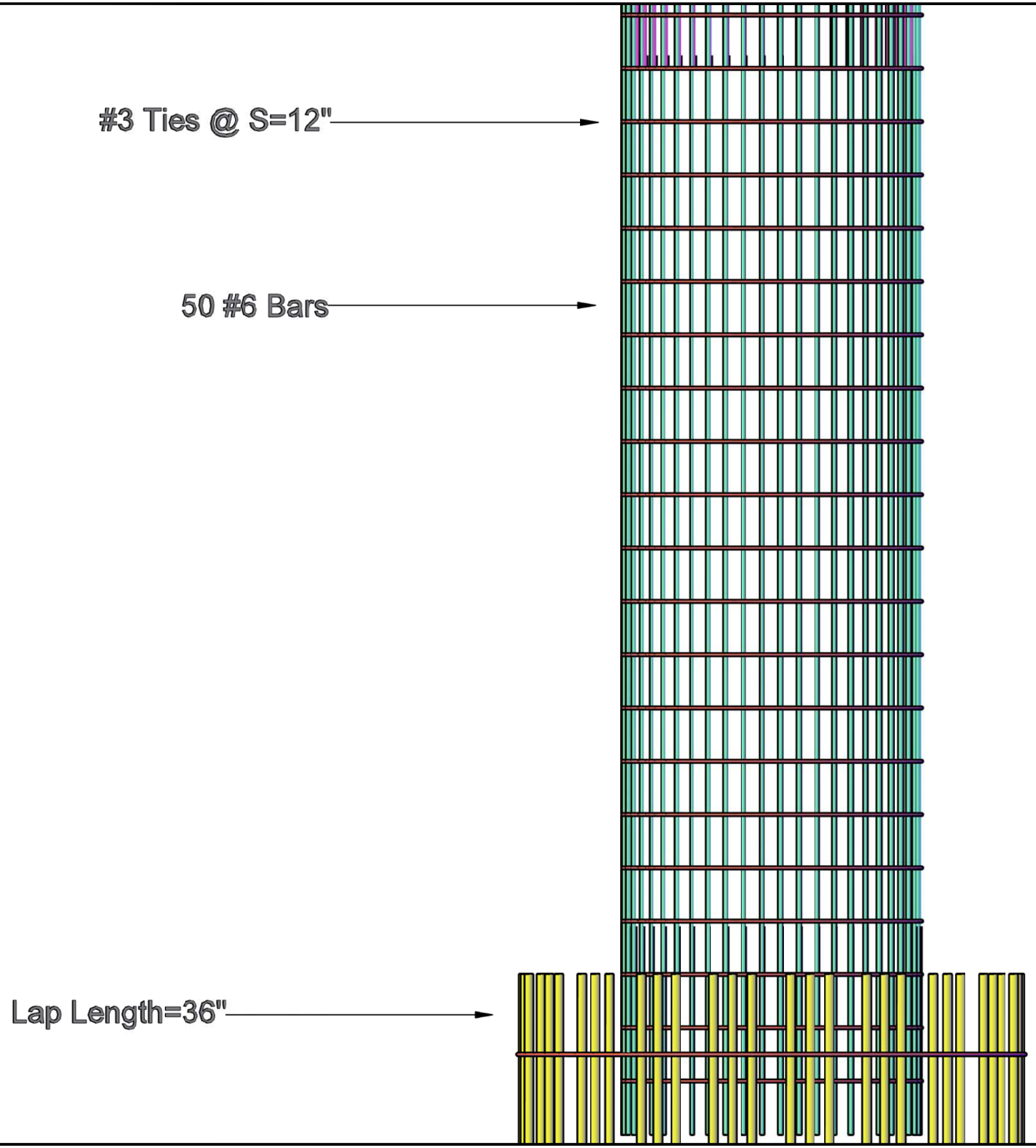

Chukchi Sea Weather Monitoring Station

DRAWN BY: Philip Hearn

60'-80' Reinforcement

STATE	YEAR
ALASKA	2012
SHEET NUMBER	TOTAL SHEETS
10	25

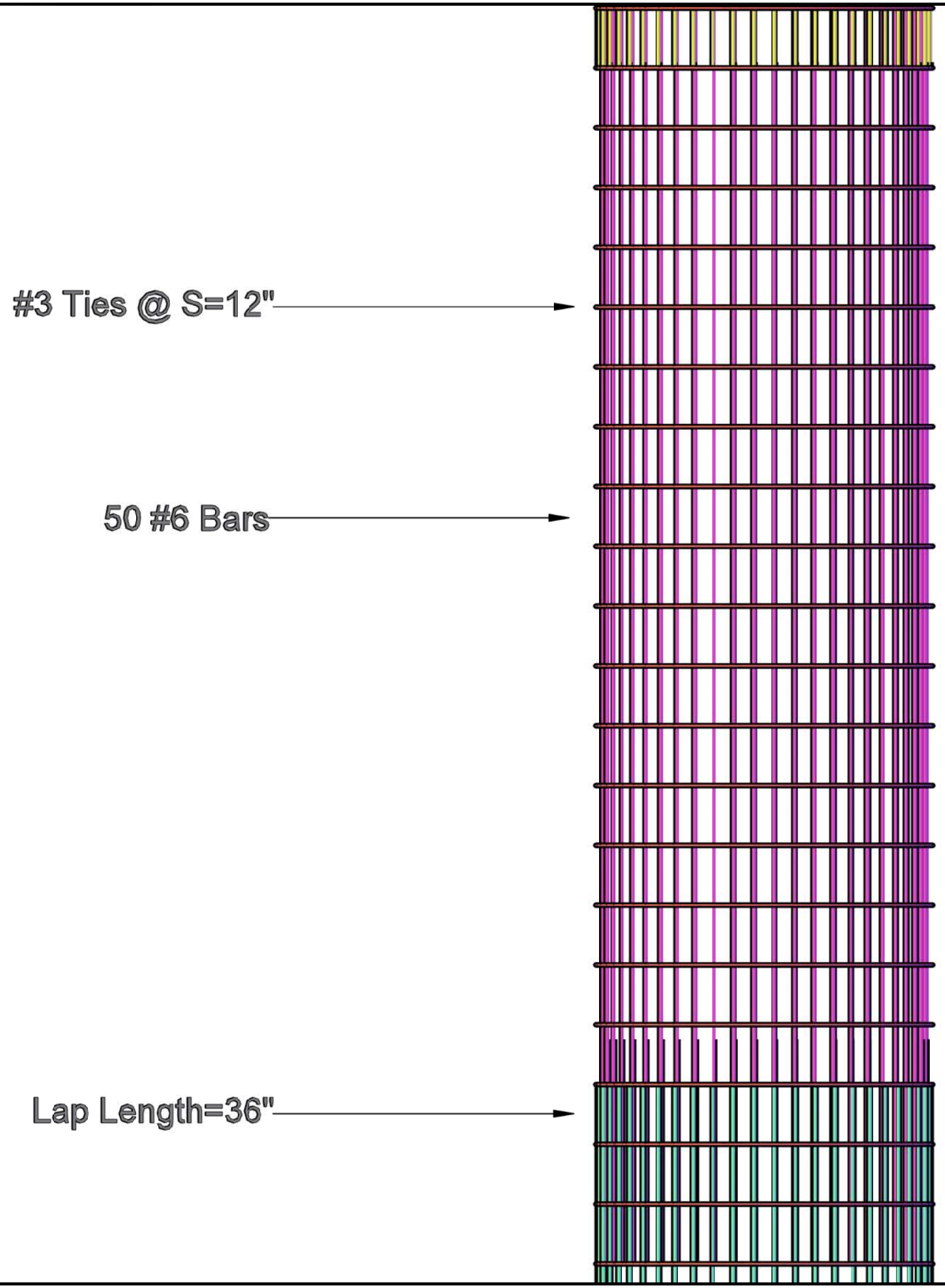

Chukchi Sea Weather Monitoring Station

DRAWN BY: Phillip Hearn

80'-100' Reinforcement

STATE	YEAR
ALASKA	2012
SHEET NUMBER	TOTAL SHEETS
11	25

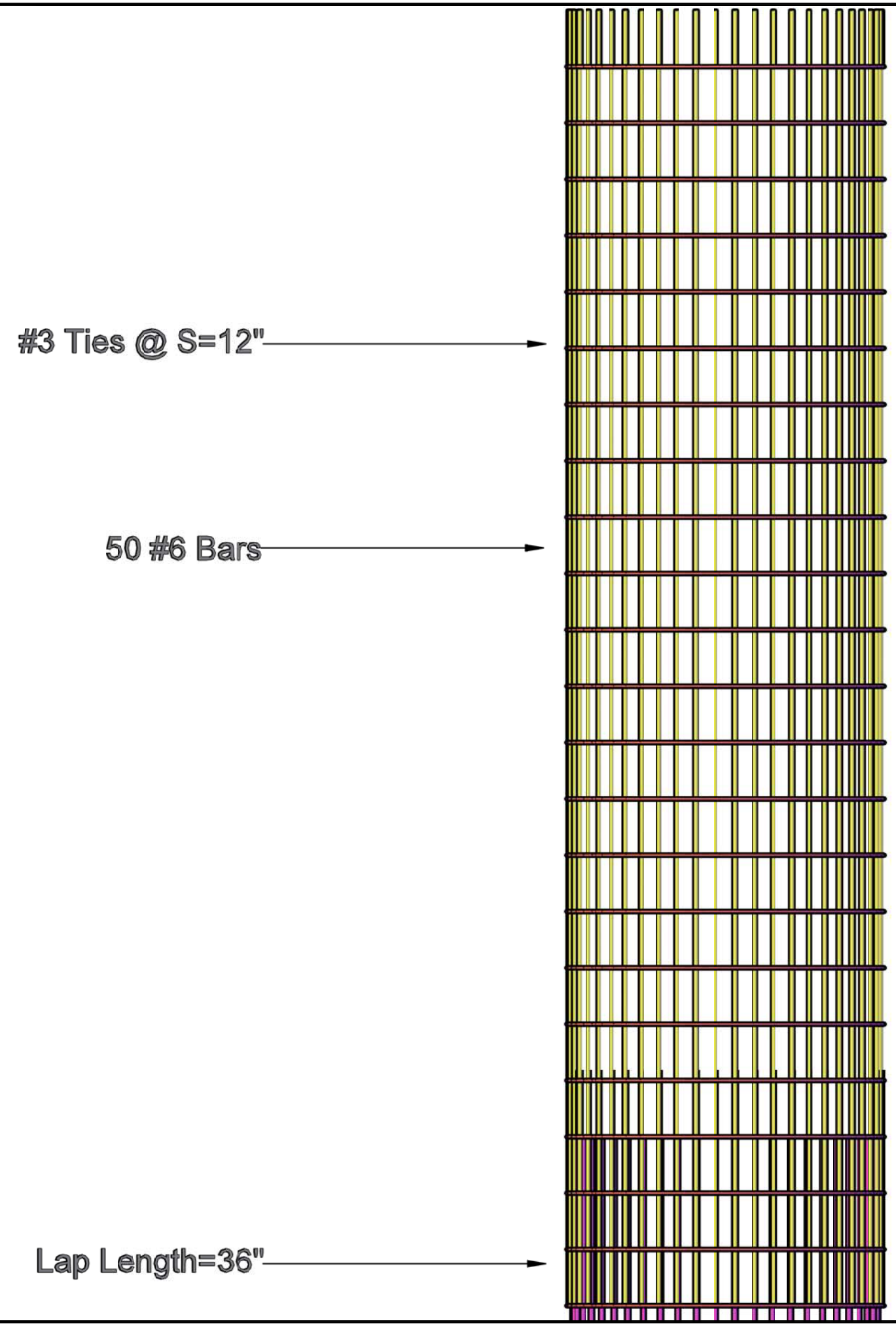

Chukchi Sea Weather Monitoring Station

DRAWN BY: Phillip Hearn

100'-120' Reinforcement

STATE	YEAR
ALASKA	2012
SHEET NUMBER	TOTAL SHEETS
11	25

Chukchi Sea Weather Monitoring Station

CHECKED BY: DR DODGE (Instructor)

DRAWN BY: Phillip Hearn

Superstructure to substructure connection

STATE ALASKA	YEAR 2012
SHEET NUMBER 12	TOTAL SHEETS 25

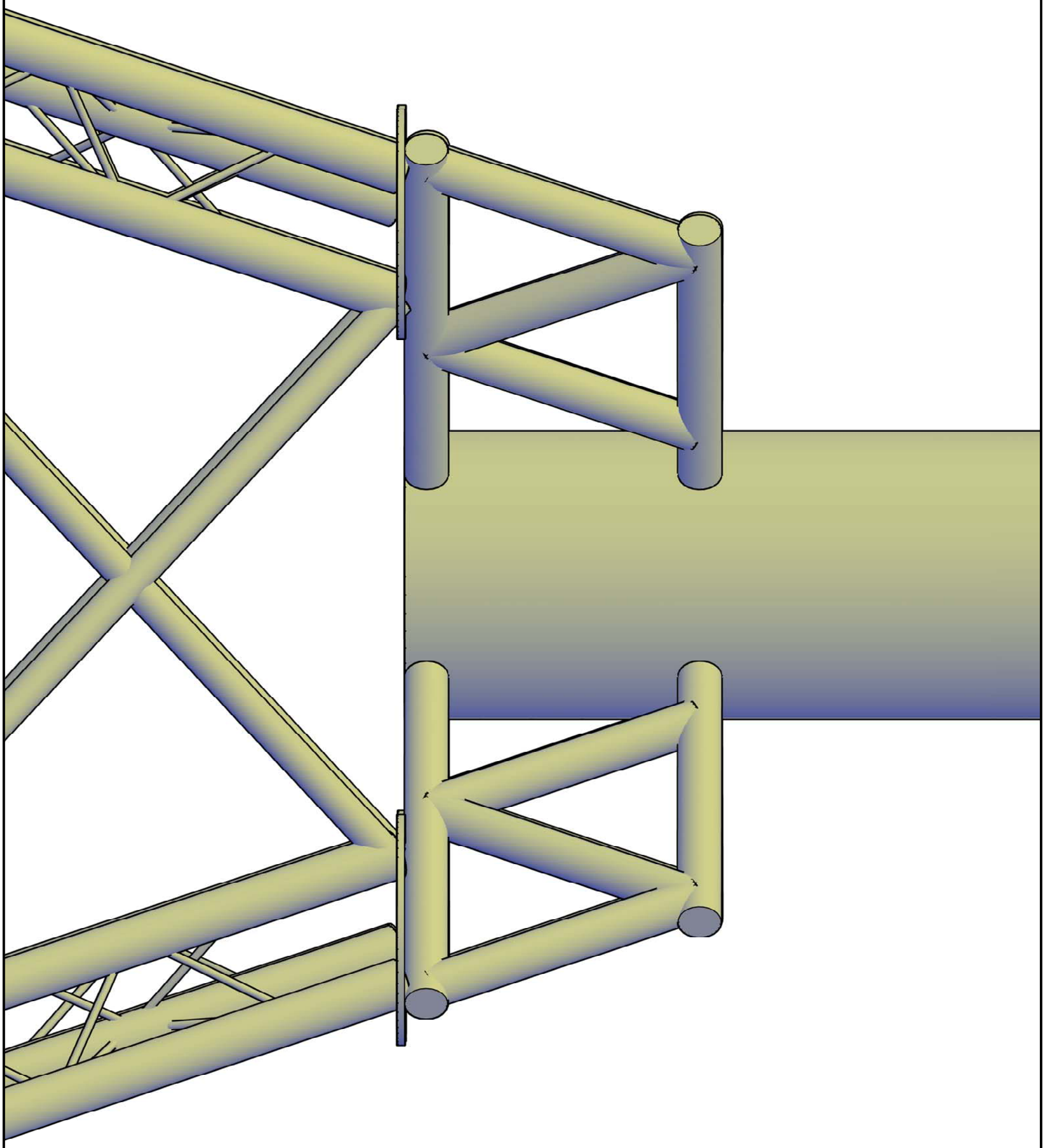

Chukchi Sea Weather Monitoring Station

DRAWN BY: Philip Hearn

Transfer Truss

YEAR	TOTAL SHEETS
2012	25

STATE	SHEET NUMBER
ALASKA	13

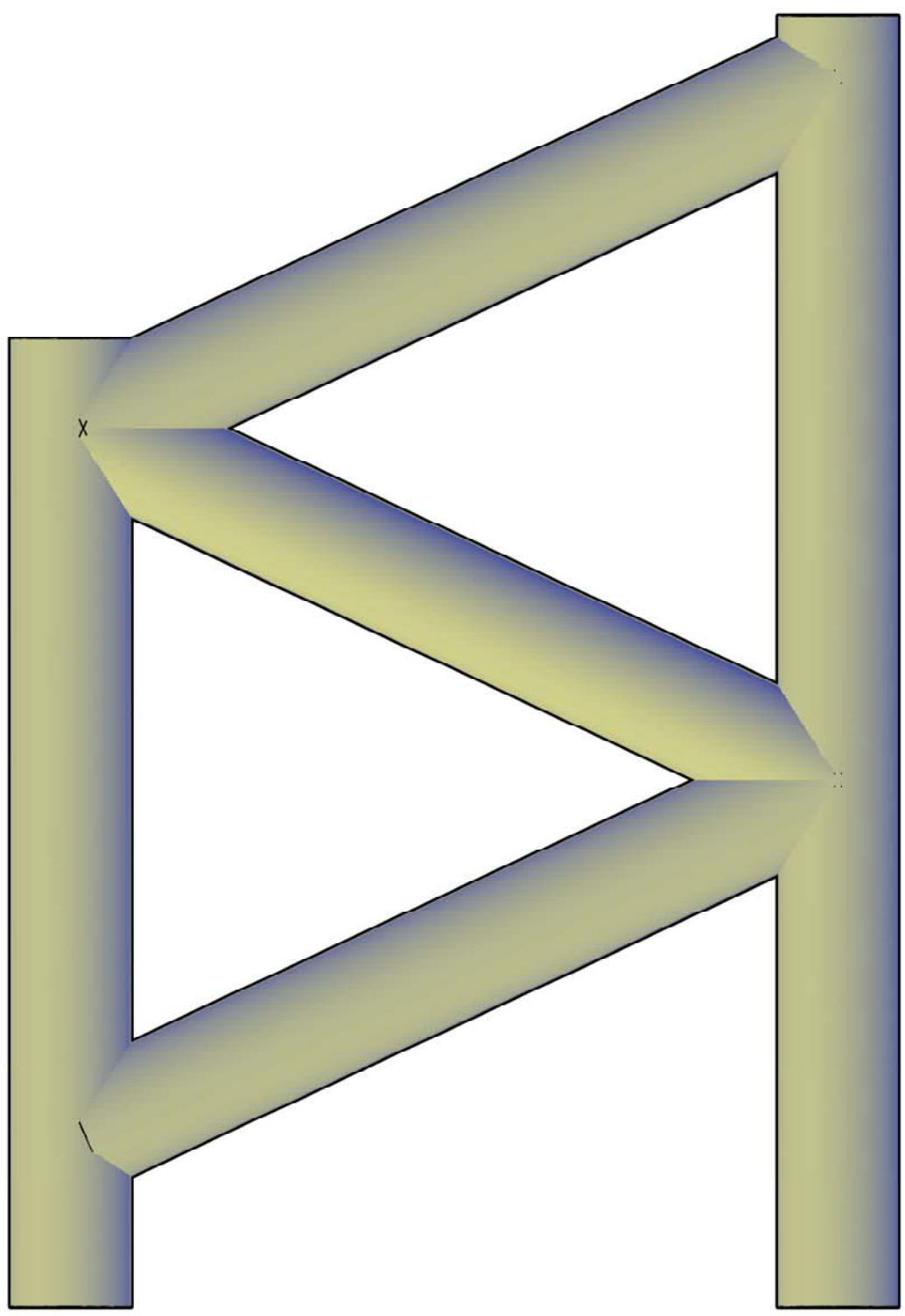

Chukchi Sea Weather Monitoring Station

DRAWN BY: Philip Hearn

Transfer truss to leg connection

YEAR	TOTAL SHEETS
2012	25

STATE	SHEET NUMBER
ALASKA	14

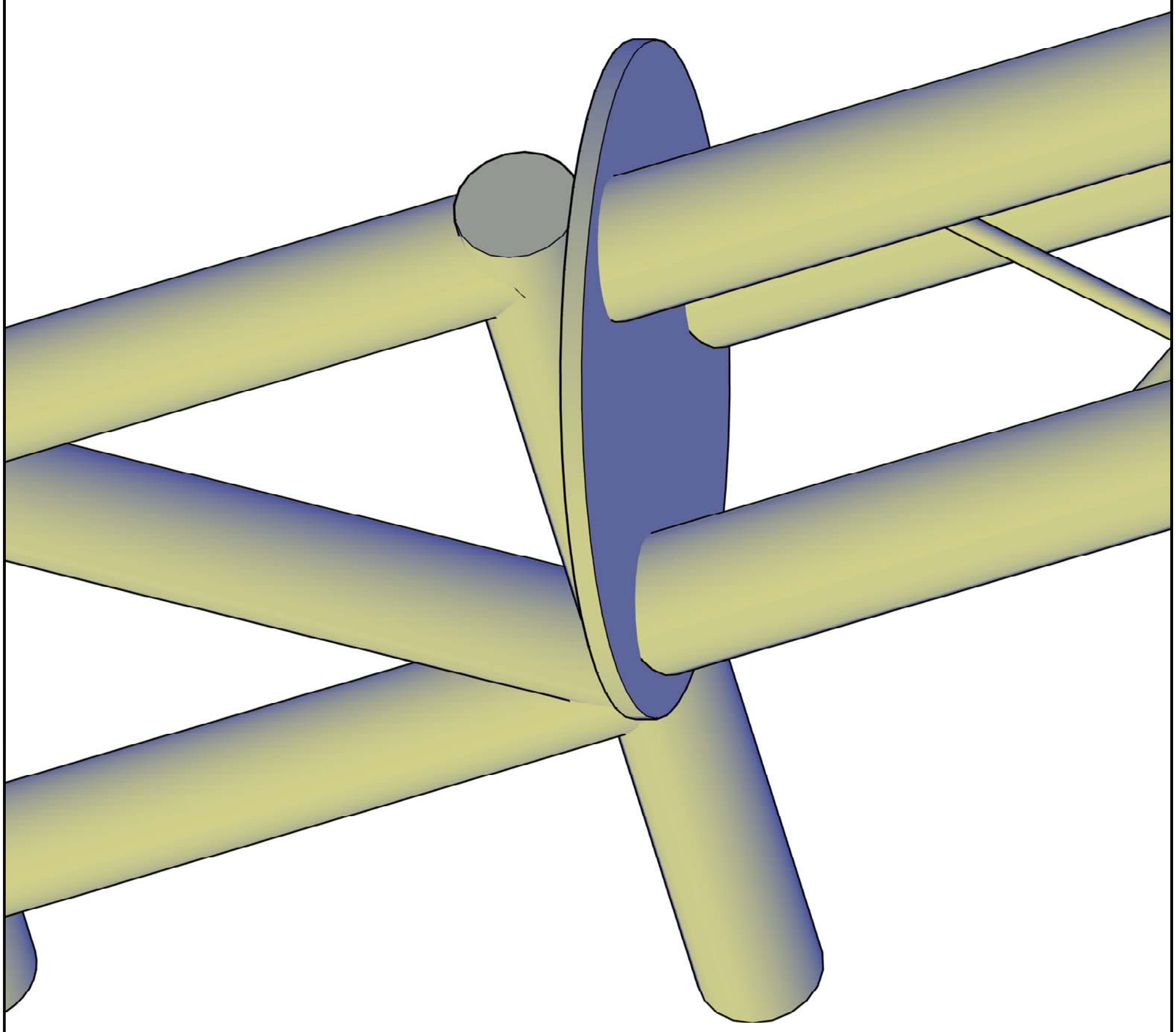

Chukchi Sea Weather Monitoring Station

DRAWN BY: Philip Hearn

Truss system side view

YEAR	TOTAL SHEETS
2012	25

STATE	SHEET NUMBER
ALASKA	15

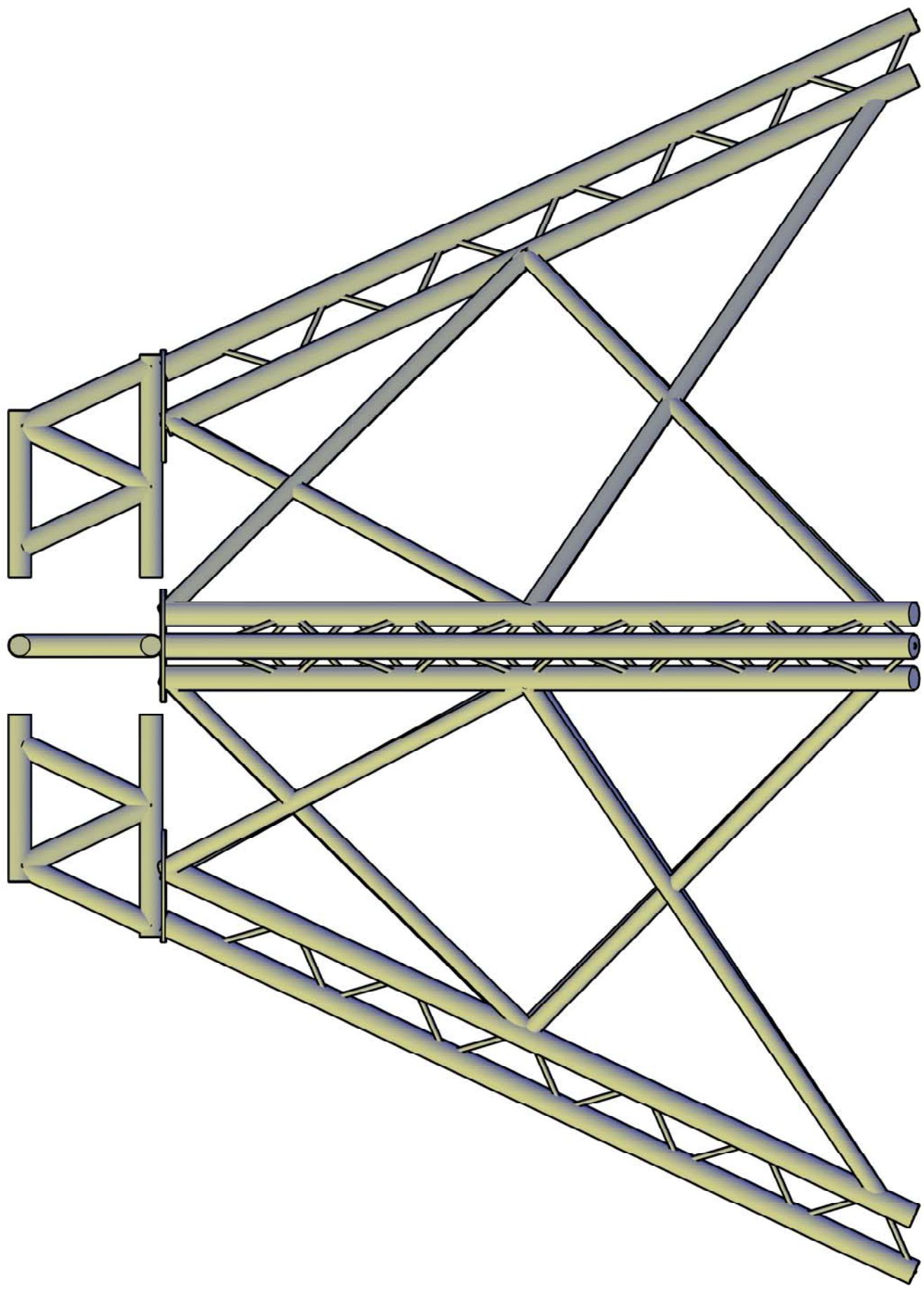

Chukchi Sea Weather Monitoring Station

DRAWN BY: Philip Hearn

Truss system top view

YEAR	TOTAL SHEETS
2012	25

STATE	SHEET NUMBER
ALASKA	16

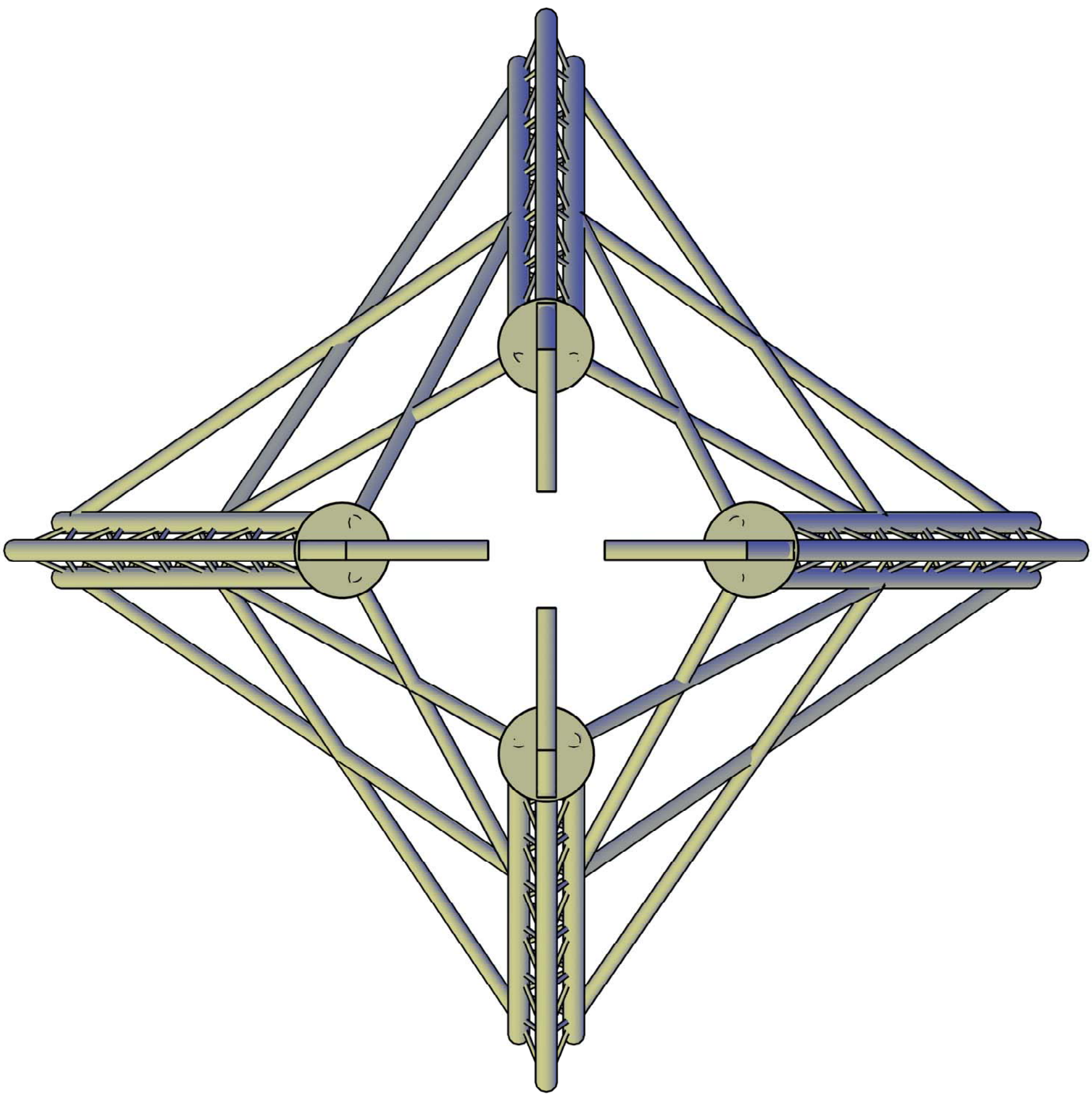

Chukchi Sea Weather Monitoring Station

DRAWN BY: Philip Hearn

Bracing

YEAR	TOTAL SHEETS
2012	25

STATE	SHEET NUMBER
ALASKA	17

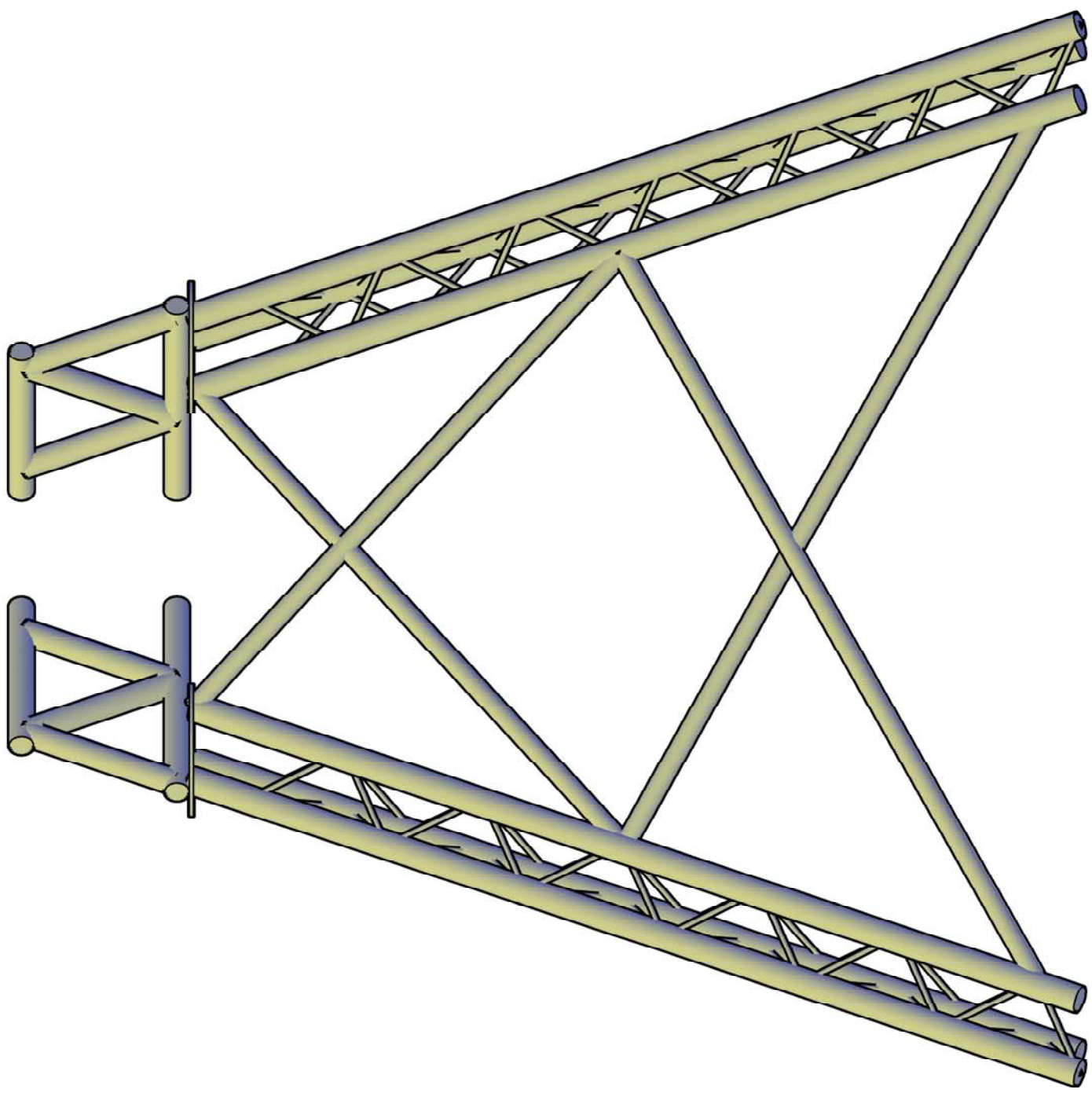

Chukchi Sea Weather Monitoring Station

DRAWN BY: Phillip Hearn

Caissons

STATE
ALASKA

YEAR
2012

SHEET NUMBER
18

TOTAL SHEETS
25

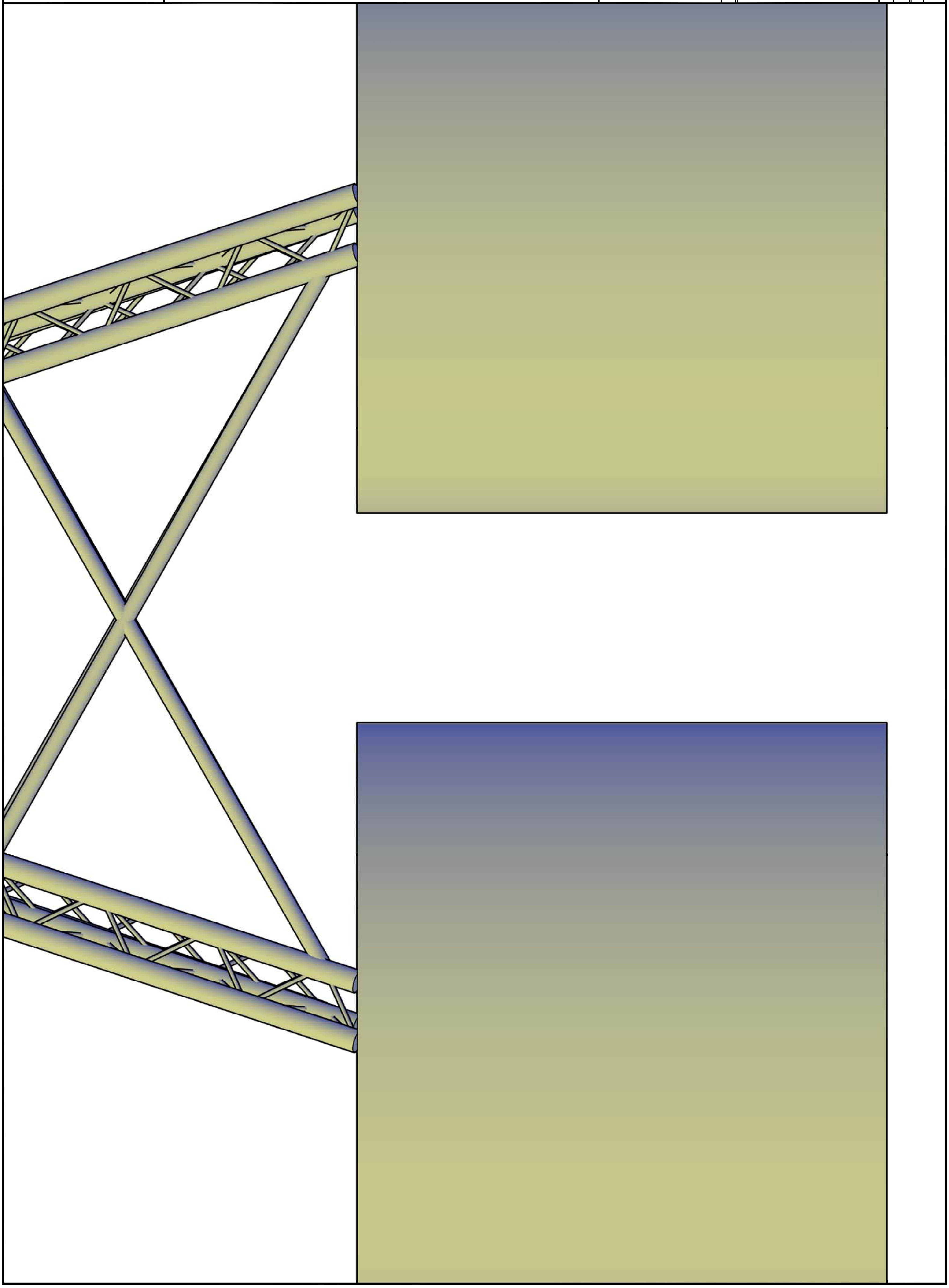

Chukchi Sea Weather Monitoring Station

DRAWN BY: Phillip Hearn

Leg to caisson connection

PROJECT DESIGNATION

STATE	YEAR
ALASKA	2012

SHEET NUMBER	TOTAL SHEETS
19	25

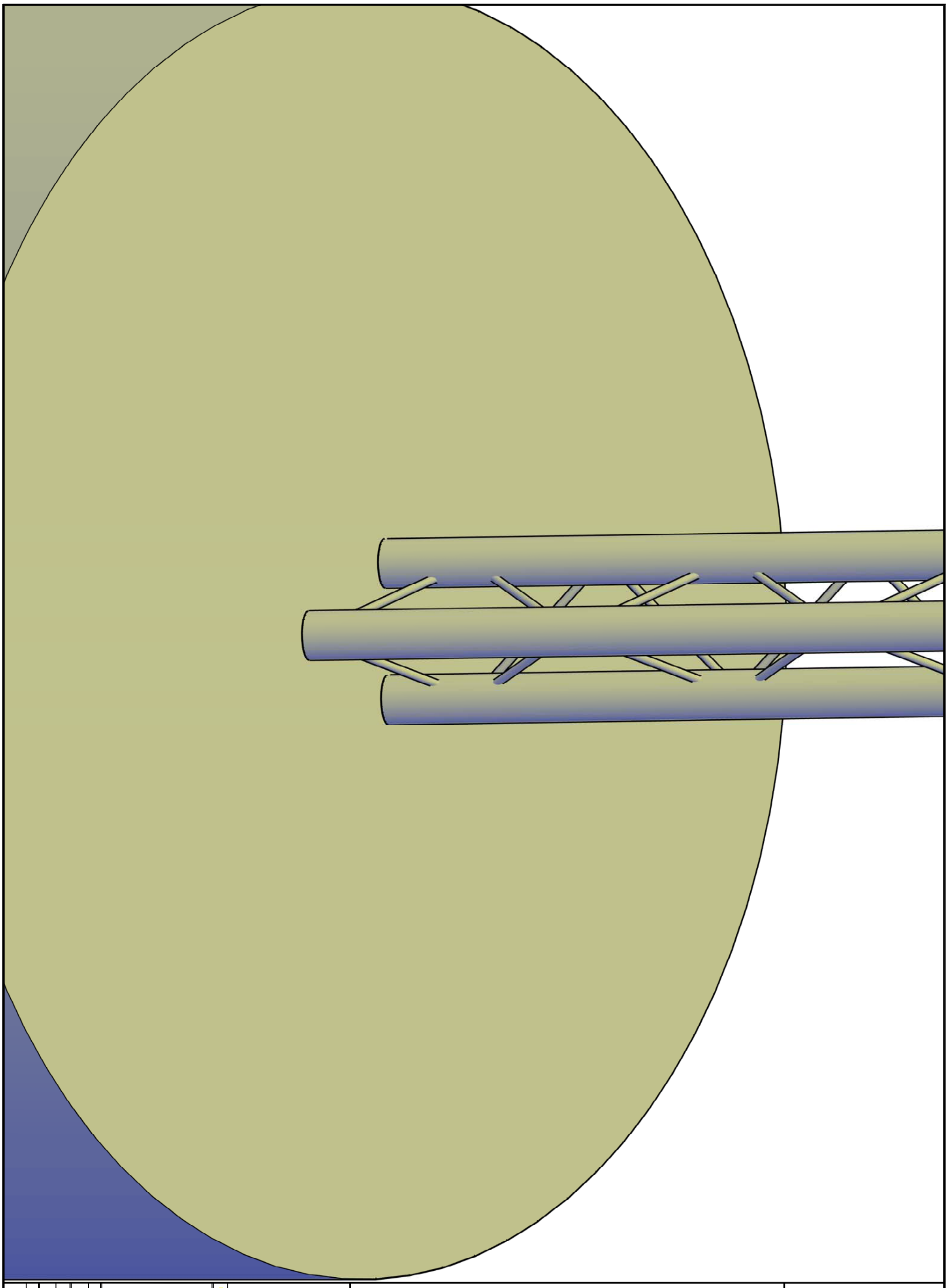

Chukchi Sea Weather Monitoring Station

DRAWN BY: Phillip Hearn

Future

STATE	YEAR
ALASKA	2012
SHEET NUMBER	TOTAL SHEETS
bonus	25